DOOR PARTS

HVV ADA

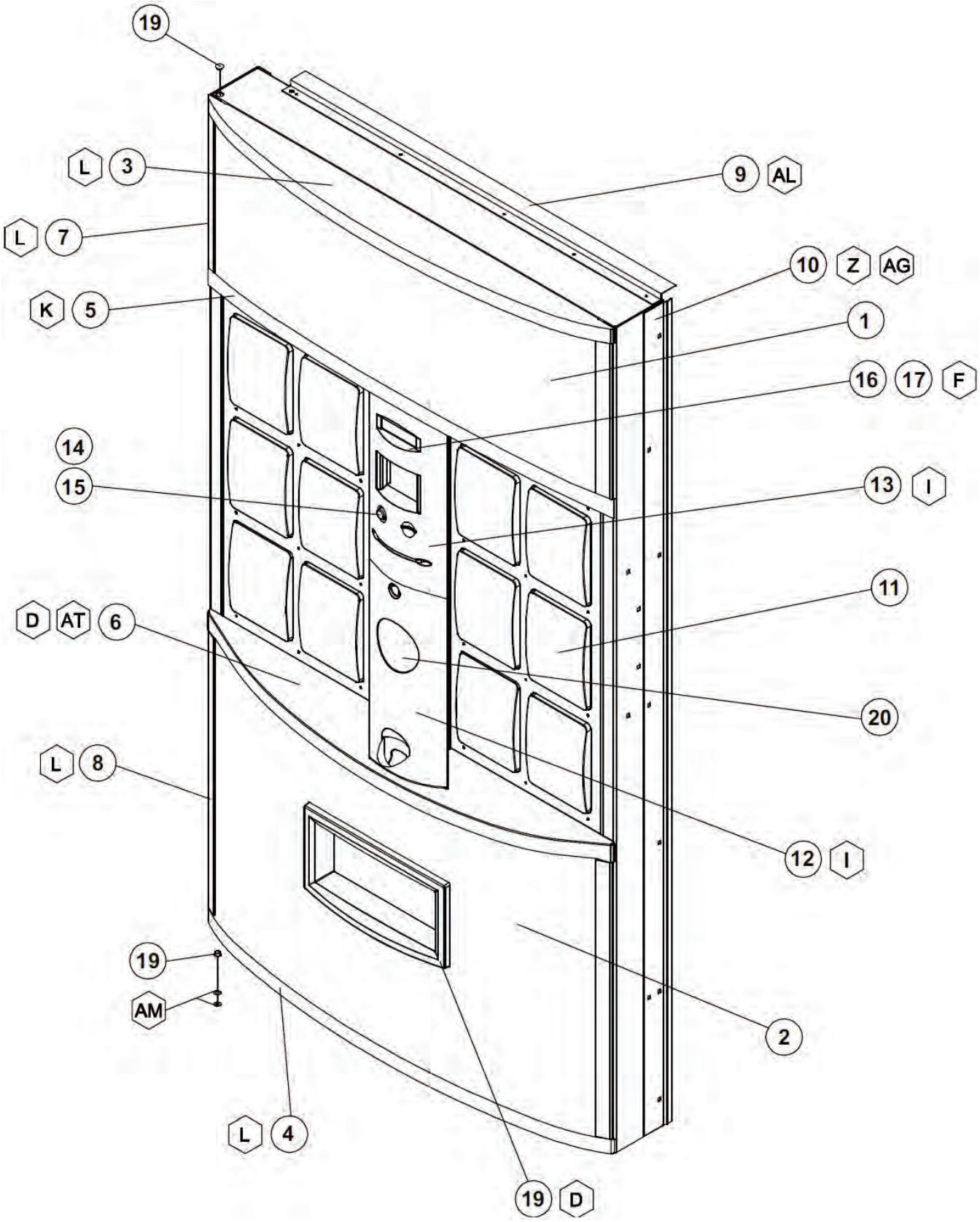
19
L 3
9 AL
L 7
10 Z AG
K 5
1
16 17 F
14
15
13 I
11
D AT 6
20
L 8
12 I
19
AM
2
L 4
19 D

V21 HVV ADA DOOR FRONT

ITEM NO.	MODEL NUMBER		621	721	821
	DESCRIPTION	QTY REQ	PART NO.	PART NO.	PART NO.
1	UPPER SIGN FACE **	1	**	**	**
2	LOWER SIGN FACE **	1	**	**	**
3	UPPER SIGN CAP, BLUE	1	1127305-1	1114341-2	1114341-2
	UPPER SIGN CAP, GREEN		1127305-2	1114341-4	1114341-4
	UPPER SIGN CAP, BLACK		1127305	1114341	1114341
4	LOWER SIGN CAP, BLUE	1	1127510-1	1114341-3	1114341-3
	LOWER SIGN CAP, GREEN		1127510-2	1114341-5	1114341-5
	LOWER SIGN CAP, BLACK		1127510	1114341-1	1114341-1
5	UPPER / MIDDLE SIGN CAP, BLUE	1	1122769	1121063	1121063
	UPPER / MIDDLE SIGN CAP, GREEN		1122769-1	1121063-1	1121063-1
	UPPER / MIDDLE SIGN CAP, BLACK		N/A	1121063-2	1121063-2
6	LOWER / MIDDLE SIGN CAP, BLUE	1	1122768	1121060	1121060
	LOWER / MIDDLE SIGN CAP, GREEN		1122768-1	1121060-1	1121060-1
	LOWER / MIDDLE SIGN CAP, BLACK		N/A	1121060-2	1121060-2
7	UPPER SIGN TRIM, 72", BLUE	2	1121100-1	1121100-13	~
	UPPER SIGN TRIM, 79", BLUE		~	~	1121100-14
	UPPER SIGN TRIM, 72", GREEN		N/A	1121100-16	~
	UPPER SIGN TRIM, 79", GREEN		N/A	~	1121100-17
	UPPER SIGN TRIM, 72", BLACK		N/A	1121100-10	~
	UPPER SIGN TRIM, 79", BLACK		N/A	~	1121100-11
8	LOWER SIGN TRIM, 72" & 79", BLUE	2	1121100	1121100-12	1121100-12
	LOWER SIGN TRIM, 72" & 79", GREEN		N/A	1121100-15	1121100-15
	LOWER SIGN TRIM, 72" & 79", BLACK		~	1121100-9	1121100-9
9	RAIN GUARD (BLUE)	1	2005937	2005872	2005872
	RAIN GUARD (GREEN)		2005937-1	2005872-01	2005872-01
	RAIN GUARD (BLACK)		N/A	2000848	2000848
10	DOOR GUARD, 72", BLUE	1	1122179	1122179	~
	DOOR GUARD, 79", BLUE		~	~	1122179-1
	DOOR GUARD, 72", GREEN		N/A	1122179-2	~
	DOOR GUARD, 79", GREEN		N/A	~	1122179-3
	DOOR GUARD, 72", BLACK		N/A	2010131	~
	DOOR GUARD, 79", BLACK		N/A	~	2009503
11	SELECTION PANEL (SEE PAGE D-7)	~	~	~	~
12	LOWER CONSUMER PANEL, WITHOUT KEY	1	1121064-4	1121064-4	1121064-4
13	UPPER CONSUMER PANEL	1	1121084-11	1121084-11	1121084-11
	-WITHOUT DBV		1121084-8	1121084-8	1121084-8
	-WITHOUT DBV, CA FRENCH		1121084-8	1121084-8	1121084-8
	-LARGE DBV		1121084-11	1121084-11	1121084-11
	-UNIVERSAL LANGUAGE		1121084-7	1121084-7	1121084-7
	-UNIVERSAL LANG., WITHOUT DBV		1121084-8	1121084-8	1121084-8
	-UNIVERSAL LANG., WITHOUT DBV, LARGE COIN		1121084-9	1121084-9	1121084-9
	-UNIVERSAL LANG., LARGE DBV, LARGE COIN		1121084-10	1121084-10	1121084-10
	-UNIVERSAL LANG., LARGE DBV		1121084-11	1121084-11	1121084-11
14	SELECTION SPRING	1	1029959	1029959	1029959
15	COIN RETURN BUTTON	1	1050473	1050473	1050473
16	DISPLAY LENS	1	1121103	1121103	1121103
17	SERIAL DISPLAY, 2 X 20	1	1137414	1137414	1137414
18	EYELET TRIM	1	1121102	1121102	1121102
19	HINGE BUSHING	2	388094	388094	388094
20	PEPSI LOGO DECAL **	1	**	**	**
	AQUAFINA LOGO DECAL **		**	**	**
	MOUNTAIN DEW LOGO DECAL **		**	**	**
	GATORADE LOGO DECAL **		**	**	**

*NOTE: WHEN ORDERING OUTER DOOR ASSEMBLY, PLEASE PROVIDE **9-CODE** OR **11-CODE** AND **MANUFACTURER'S DATE CODE**.

NOTE: WHEN ORDERING SIGN FACE, PLEASE PROVIDE **FRANCHISE AND **STYLE**.

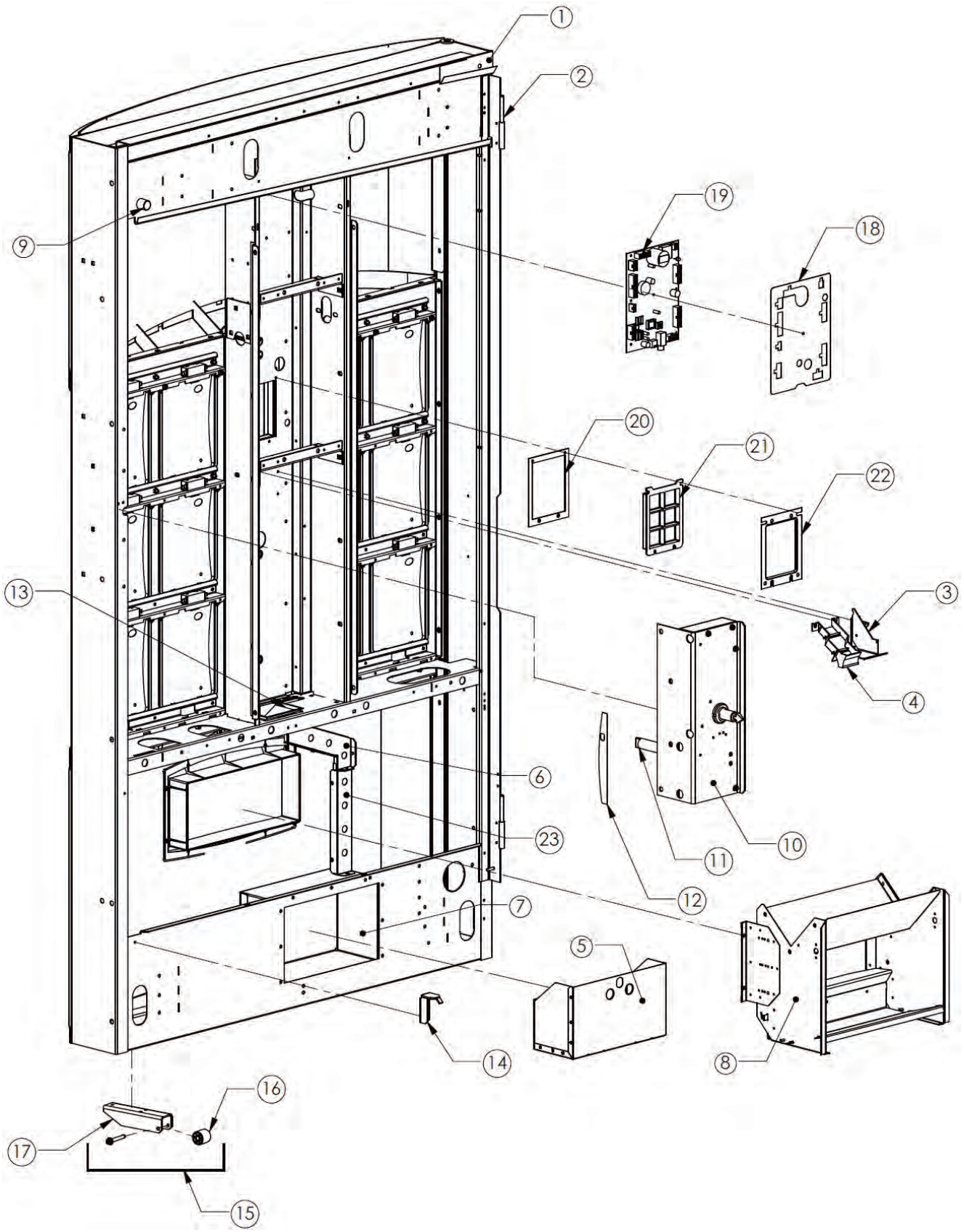
1
2
19
18
9
20
21
22
13
3
4
6
23
11
10
12
7
5
14
8
16
17
15

V21 HVV ADA DOOR BACK

ITEM NO.	MODEL NUMBER		621	721	821
	DESCRIPTION	QTY REQ	PART NO.	PART NO.	PART NO.
1	RAIN GUTTER	1	1121204	1121204	1121204
2	INNER DOOR HINGE, MALE	1	1121287	1121287	1121287
3	COIN RETURN ASSEMBLY	1	2006236-43	2006236-43	2006236-43
	COIN RETURN PIVOT BRACKET		1121071	1121071	1121071
	COIN RETURN CRANK		1121072	1121072	1121072
	COIN INSERT SPRING		1060023	1060023	1060023
	SHOULDER WASHER		1122715	1122715	1122715
4	COIN INSERT CHUTE	1	1121066	1121066	1121066
5	COIN BOX ASSEMBLY	1	1121124-1	1121124-1	1121124-1
6	COIN CHUTE, UPPER	1	1200007	1200007	1200007
7	COIN BOX HOUSING	1	1199961	1199961	1199961
8	HOPPER ASSEMBLY	1	1189115	1189115	1189115
9	DOOR BUMPER (HEYCO 2551)	1	1036912	1036912	1036912
10	LOCK ASSEMBLY, HT2-TT *	1	1123073	1123073	1123073
11	TRITEQ LOCK LIGHT PIPE/SHROUD	1	1123640	1123640	1123640
12	LIGHT PIPE SHIELD	1	1199017	1199017	1199017
13	COIN RETURN CHUTE	1	1142809	1142809	1142809
14	INNER DOOR RAMP	1	1121714	1121714	1121714
15	DOOR ROLLER ASSEMBLY	1	1120564	1120564	1120564
16	DOOR ROLLER	1	1120388	1120388	1120388
17	DOOR ROLLER BRACKET	1	1239376	1239376	1239376
18	ELECTRONIC CONTROLLER COVER	1	1123529	1123529	1123529
19	VEC 12.3 PCBA	1	1123053-XX	1123053-XX	1123053-XX
20	DBV GASKET	1	1086759	1086759	1086759
21	DBV PLUG	1	388216-1	388216-1	388216-1
22	DBV INSERT (PLUG) BK	1	2000856	2000856	2000856
23	COIN BOX CHUTE, LOWER	1	1200033	1200033	1200033
24	DOOR HARNESS (NOT PICTURED)	1	1122905	1122905	1122905

NOTE: T-HANDLE OPTION IS AVAILABLE FOR MODEL 621 ONLY. SEE PAGES PD-12 TO PD-13.

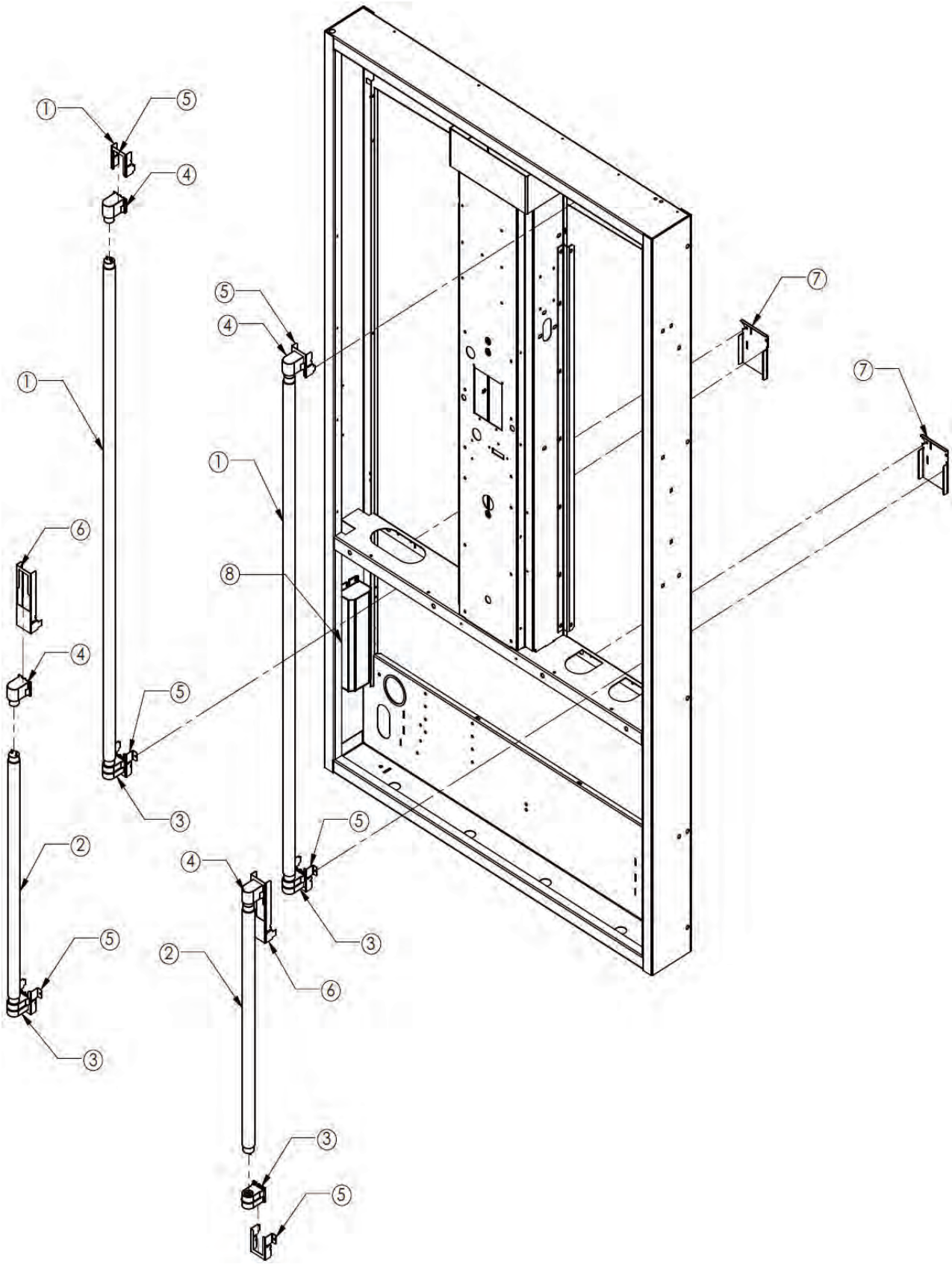
1
5
4
5
4
1
1
6
8
4
5
3
2
5
4
3
5
2
6
3
3
5
7
7

V21 HVV ADA U.S. LIGHTING

ITEM NO.	MODEL NUMBER		621 / 721	821
	DESCRIPTION	QTY REQ	PART NO.	PART NO.
1	LAMP, T-8, 48"	2	1121173-2	1121173-2
	LMAP, LED, 48"	2	1237136-1	1237136-1
2	LAMP, T-8, 24"	2	1121173	1121173
	LAMP, LED, 24"	2	1237136	1237136
3	LAMPHOLDER, FIXED	4	1151253	1151253
4	LAMPHOLDER, PLUNGER	4	1151265	1151265
5	LAMP BRACKET, 90°	6	1126231	1126231
6	LAMP BRACKET, STRAIGHT	2	1198634	1198634
7	VERTICAL SUPPORT, MIDDLE	2	1199005	1198645
8	BALLAST, 120V/60HZ	1	1127052	1127052
9	RAIN CURTAIN, BALLAST (NOT SHOWN)	1	1125150	1125150
10	RAIN CURTAIN, LIGHTS, T8 (NOT SHOWN)	1	1121838-1	1121838-1

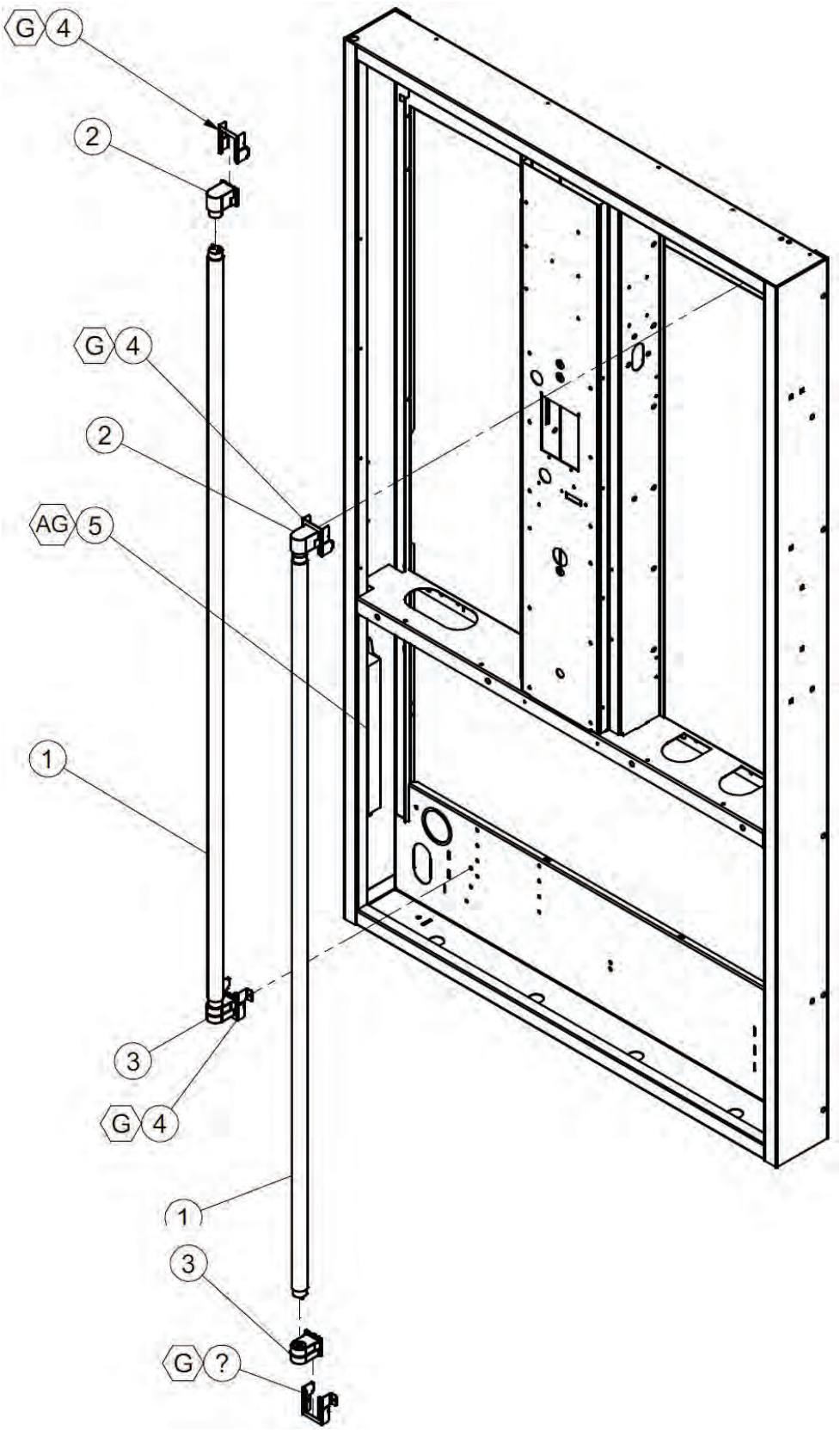
G 4
2
G 4
2
AG 5
1
3
G 4
1
3
G ?

V21 HVV ADA INTERNATIONAL LIGHTING

ITEM NO.	DESCRIPTION	QTY REQ	PART NO.
1	LAMP, T-8 (FOR MODEL 721)	2	1121030
	LAMP, T-8 (FOR MODEL 821)		1119340
2	LAMPHOLDER, PLUNGER	2	388532
3	LAMPHOLDER, FIXED	2	388531
4	LAMP BRACKET	4	1126231B
5	BALLAST, 220V (FOR MODEL 721)	1	1120450
	BALLAST, 220V/240V (FOR MODEL 821)		1124848
6	RAIN CURTAIN, BALLAST (NOT SHOWN)	1	1125150
7	RAIN CURTAIN, LIGHTS, T8 (NOT SHOWN)	1	1121838-1

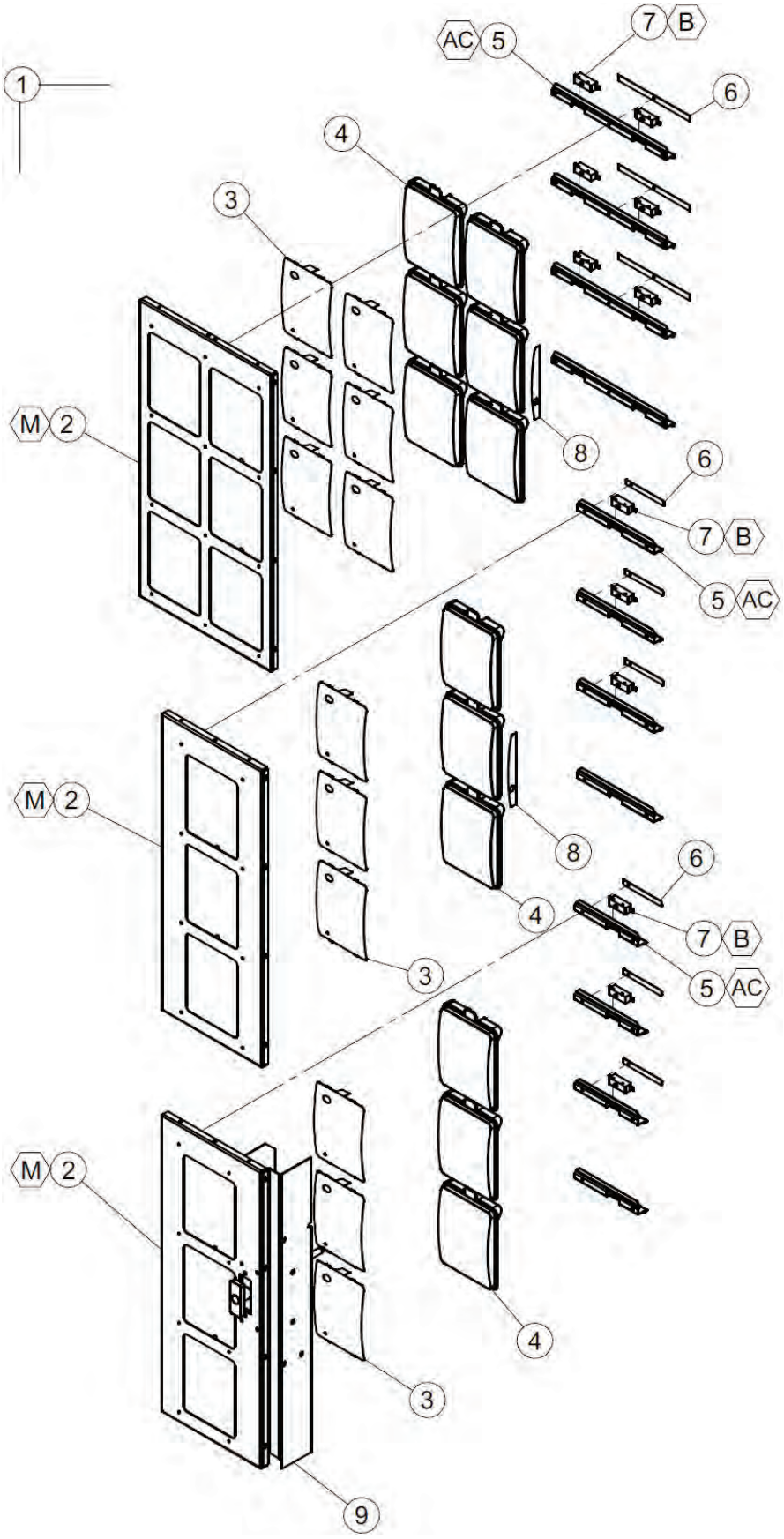
1
AC 5
7 B
6
4
3
M 2
8
6
7 B
5 AC
M 2
8
6
4
7 B
3
5 AC
M 2
4
3
9

V21 HVV ADA SELECTION PANEL ASSEMBLY

ITEM NO.	MODEL NUMBER		621	721 / 821
	DESCRIPTION	QTY REQ	PART NO.	PART NO.
1	BUTTON ASSEMBLYS:			
	RIGHT PANEL ASSEMBLY, 6 SELECTION, BLUE	2	N/A	1122613
	LEFT PANEL ASSEMBLY, 6 SELECTION, BLUE	2	N/A	1122613-1
	SOLD OUT/READY TO VEND ASSY, RIGHT, 6 SEL, BLUE	2	N/A	1122613-2
	SOLD OUT/READY TO VEND ASSY, LEFT, 6 SEL, BLUE	2	N/A	1122613-3
	RIGHT PANEL ASSEMBLY, 6 SELECTION, GREEN	2	N/A	1122613-6
	LEFT PANEL ASSEMBLY, 6 SELECTION, GREEN	2	N/A	1122613-7
	SOLD OUT/READY TO VEND ASSY, RIGHT, 6 SEL, GREEN	2	N/A	1122613-8
	SOLD OUT/READY TO VEND ASSY, LEFT, 6 SEL, GREEN	2	N/A	1122613-9
	RIGHT PANEL ASSEMBLY, 6 SELECTION, BLACK	2	N/A	1122613-20
	LEFT PANEL ASSEMBLY, 6 SELECTION, BLACK	2	N/A	1122613-21
	SOLD OUT/READY TO VEND ASSY, RIGHT, 6 SEL, BLACK	2	N/A	1122613-22
	SOLD OUT/READY TO VEND ASSY, LEFT, 6 SEL, BLACK	2	N/A	1122613-23
	RIGHT PANEL ASSEMBLY, 3 SELECTION, BLUE	2	1122613-4	N/A
	LEFT PANEL ASSEMBLY, 3 SELECTION, BLUE	2	1122613-5	N/A
	RIGHT PANEL ASSEMBLY, 3 SEL, T-HANDLE OPTION, BLUE	2	1122613-24	N/A
2	BUTTON PANEL, BLUE	2	1122884	1121121
	BUTTON PANEL, T-HANDLE, BLUE (RIGHT SIDE ONLY)	1	1122884-2	N/A
	BUTTON PANEL, GREEN	2	1122884-1	1121121-01
	BUTTON PANEL, BLACK	2	N/A	1121121-03
3	FLAVOR LABEL	**	**	**
4	SELECTION BUTTON	A/R	1121057	1121057
5	BUTTON RETAINER SWITCH MOUNT, 6 SEL	8	N/A	1121070
	BUTTON RETAINER SWITCH MOUNT, 3 SEL	4	1122619	N/A
	BUTTON RETAINER SWITCH MOUNT, 3 SEL, T-HANDLE	4	1126109	N/A
6	FLAT SPRING	A/R	1122622	1121112
7	2-TERMINAL SWITCH	A/R	1120885	1120885
8	LIGHT PIPE SHIELD	1	1199017	1199017
9	T-HANDLE LOCK ASSEMBLY (SEE PAGES PD-12 TO PD-13)	~	~	~

NOTE: WHEN ORDERING FLAVOR LABELS, PLEASE PROVIDE **FRANCHISE AND **STYLE**.

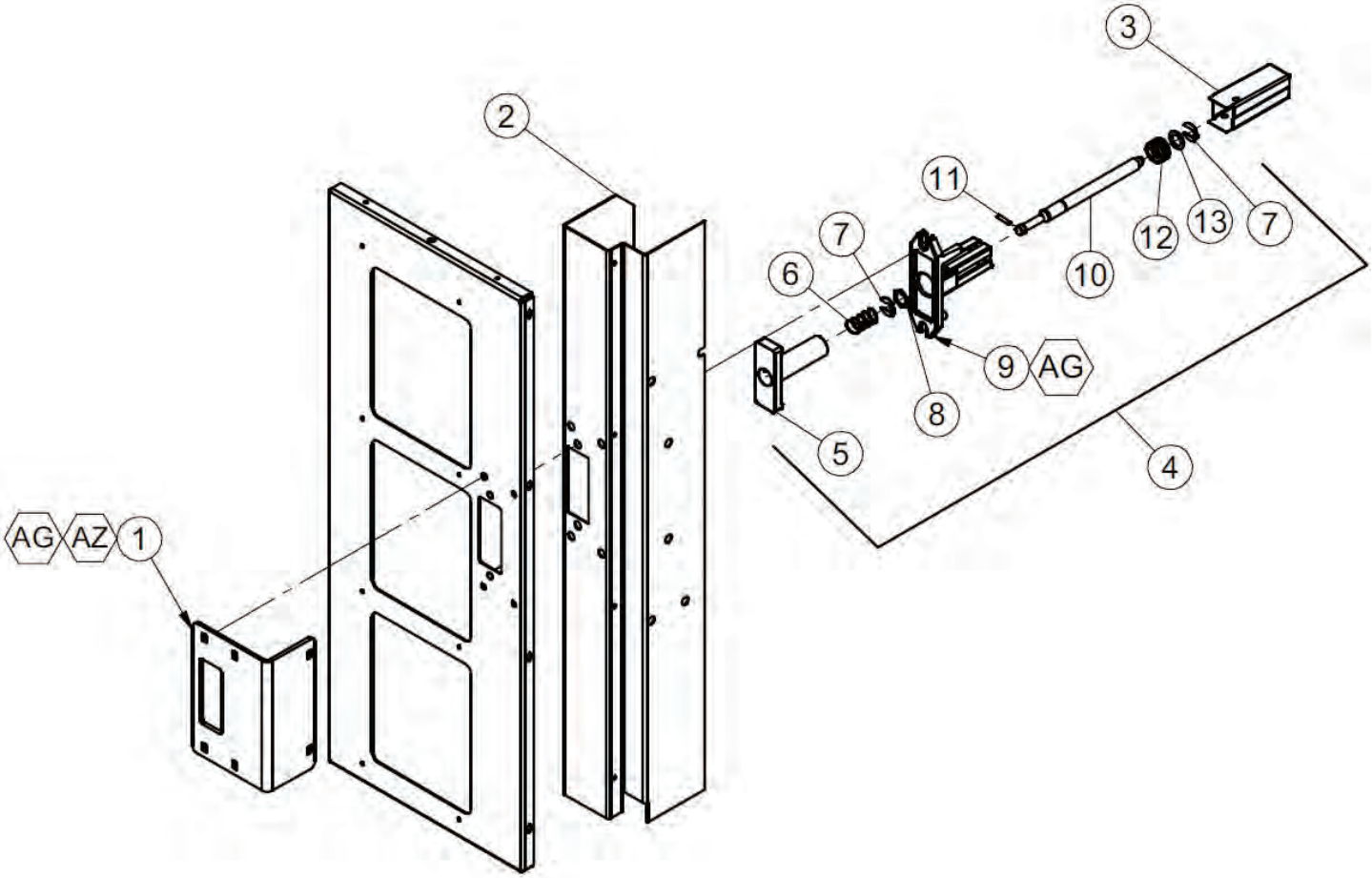
3
2
11
7
12
13
7
6
10
9
AG
8
5
4
AG
AZ
1

V21 HVV T-HANDLE ASSEMMBLY

ITEM NO.	DESCRIPTION	QTY REQ	PART NO.
1	LOCK COVER PLATE, BLUE	1	1126568
2	LOCK SHIELD	1	1126218
3	LOCK STUD COVER	1	1121817-1
4	T-HANDLE LOCK ASSEMBLY	1	1126557
5	T-HANDLE	1	1002392
6	SPRING	1	389691
7	E-RING RETAINER	2	388589
8	HEX WASHER	1	387600
9	FLANGE	1	1002384
10	LOCK STUD	1	1122399
11	PIN, LOCK STUD	1	387601
12	SPRING QUICKER LOCK	1	389690
13	WASHER	1	387718

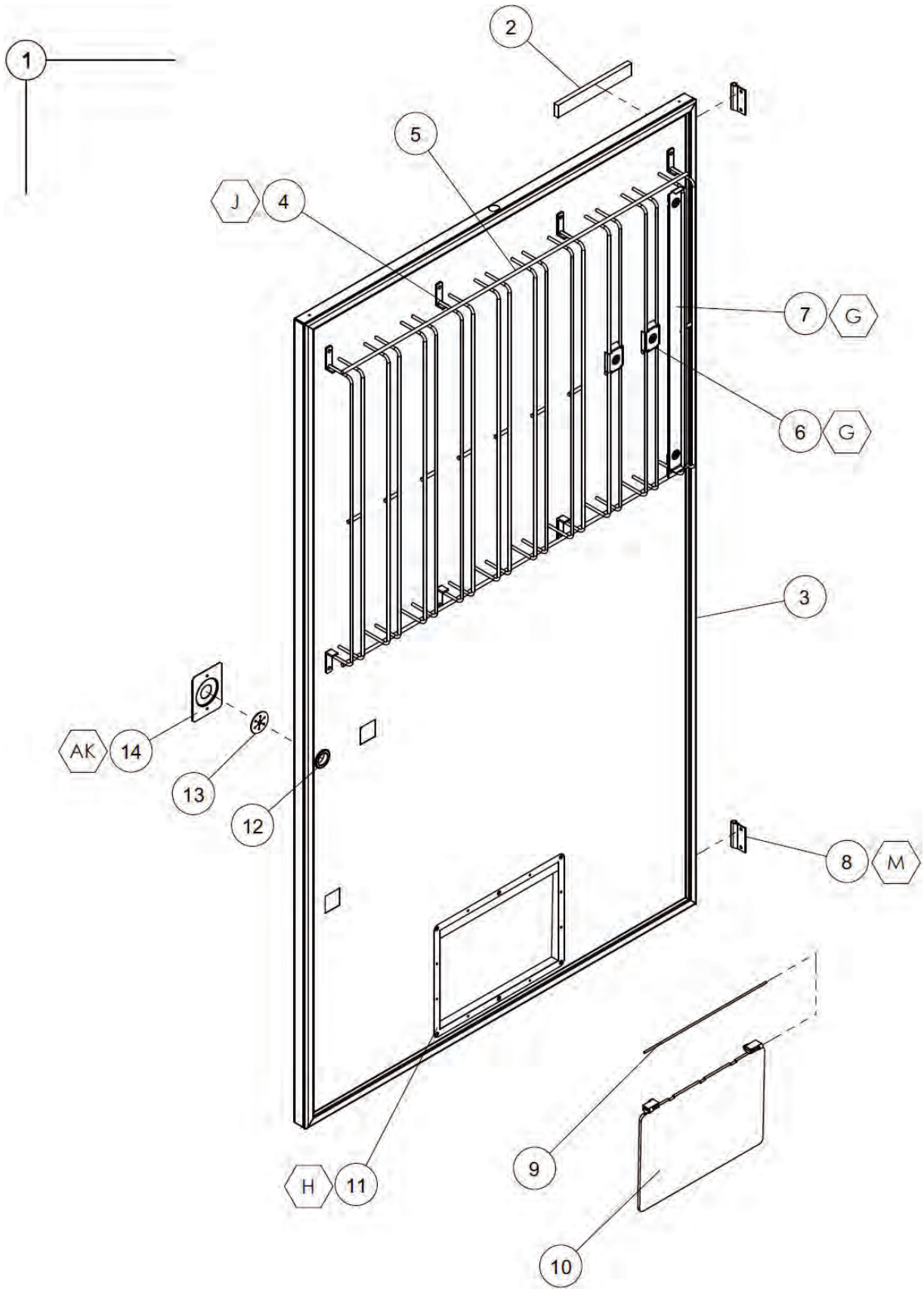
1
2
5
J
4
7
G
6
G
3
AK
14
13
12
8
M
H
11
9
10

V21 HVV ADA INNER DOOR

ITEM NO.	MODEL NUMBER		621	721	821
	DESCRIPTION	QTY REQ	PART NO.	PART NO.	PART NO.
1	INNER DOOR ASSEMBLY	1	134302-170	134302-168	134302-169
2	RAIN SEAL, INNER DOOR, 7"	1	1111732-2	1111732-2	1111732-2
3	INNER DOOR SEAL	1	1075678-2	1075678	1075678-1
4	UPPER PRODUCT RETAINER ASSEMBLY	1	1185792	1185792-1	1185792-2
5	UPPER PRODUCT RETAINER	1	1185778	1181827	1181827-1
6	SHORT CLIP ASSEMBLY	2	1125201	1125201	1125201
7	LONG CLIP ASSEMBLY	1	1125202	1125202	1125202-1
8	INNER DOOR HINGE, FEMALE	2	1121286	1121286	1121286
9	HINGE PIN	1	1172323	1172323	1172323
10	REVERSABLE VEND FLAP	1	1013076	1013076	1013076
11	INNER DOOR EYELET	1	387273	387273	387273
12	GROMMET	1	1123629	1123629	1123629
13	INNER DOOR LATCH	1	1121711	1121711	1121711
14	INNER DOOR LATCH BRACKET	1	1121712	1121712	1121712

FOR A COMPLETE LIST OF HARNESSES, PLEASE SEE PAGE C-15.

V21 HVV ADA INNER DOOR LABELS - NOT SHOWN

MODEL NUMBER		621 / 721 / 821
DESCRIPTION	QTY REQ	PART NO.
ERROR CODE LABEL, VEC 12.1	1	1170775
PROGRAMMING LABEL, VEC 12.1	1	1123345
WIRING DIAGRAM LABEL, VEC 12.1/12.2	1	1127541
PRODUCT SET UP, V21	1	1126121
SPACE TO SALES, VEC 12.1	1	1123311
INNER DOOR LABEL	1	1125783-1