INITIAL SET UP

A. UNPACKING

Remove all plastic film, cardboard and tape from the outside of the vendor. Loosen any shipping devices used to secure interior parts during shipment (backspacer, shims or spacers).

To remove shipping boards from base, raise vendor on a well stabilized lifting device. Remove the leveling bolt which hold the boards in place and remove the boards. Replace bolts to equal heights in the threaded holes.

Another method to remove shipping boards is to split the boards apart. Using a pinch bar, or a heavy screwdriver and hammer, insert tool into the slots and force the board apart.

B. POSITIONING AND LEVELING

IMPORTANT: Place the vendor (in desired location) at least 3 to 4 inches away from any rear obstruction. This is for proper air flow through the refrigeration compartment. The system requires front to rear air circulation for proper operation. Level vendor with leveling bolts. Be sure all four leveling bolts are supporting the machine.

C. POWER SUPPLY CONNECTION

CAUTION: DO NOT USE AN EXTENSION CORD!

The Vendor's power requirements will vary depending upon the country it was purchased for. To verify the power requirements of the Vendor, check the serial plate located on the hinge side of the door (see figure 1 on page 3). The power requirements are listed on the serial plate.

To insure safe operation of the vendor, the vendor's power supply must be a properly grounded and polarized outlet. Before plugging the vendor into the outlet, test the outlet to confirm it will meet the vendors power requirements. If the power supply of the outlet is different from the power requirements of the vendor, a transformer may be necessary.

If the power requirements are not properly met, contact a licensed electrician and have the necessary correction made.

Should you require additional information contact a service representative, see parts, sales and service centers listed on page 13 and 14 of the machine installation and safety manual.

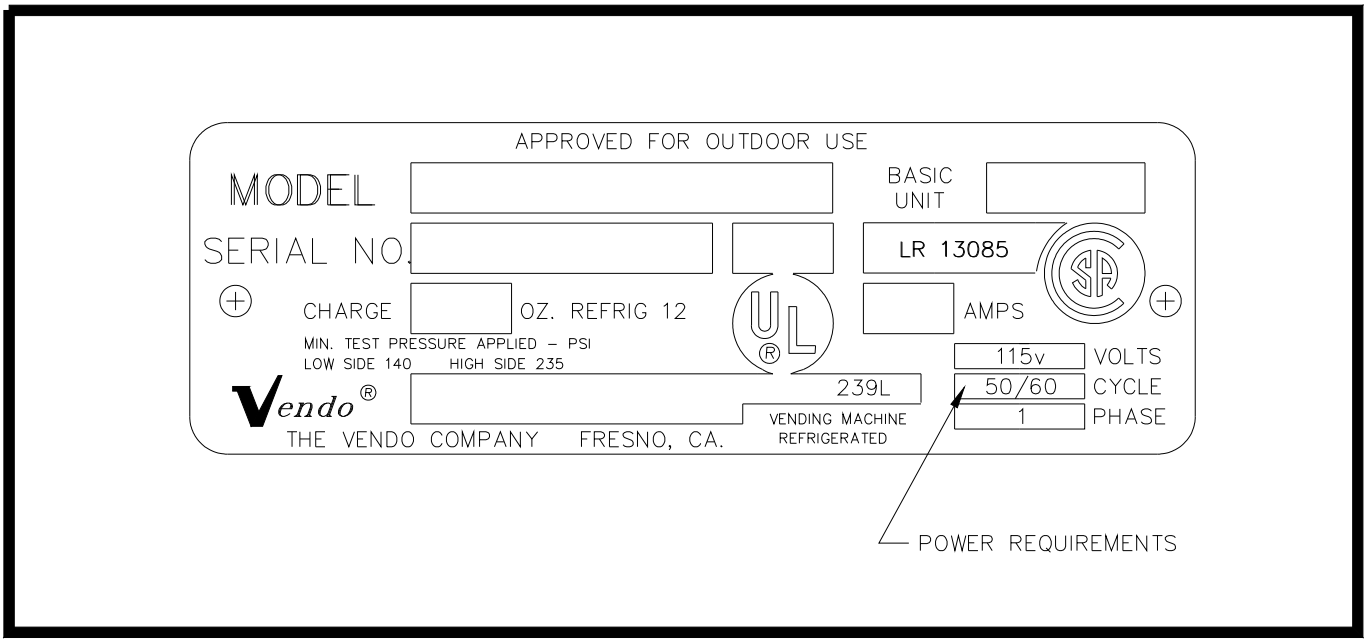

FIGURE 1

LOCK CODING

The safest method to code the lock is to remove it and secure it in a vise or similar tool. The lock can also be recoded in the handle.

(For the following steps refer to Figure 2)

STEP 1
Insert key into lock. Insert pin into hole in cap.

STEP 2:
To release cap, push pin in firmly and rotate key to right slot position. Remove cap and key as one unit.

STEP 3:
Using magnet end of loading tool, remove all seven tumblers.

STEP 4:
Slip preloaded coder on lock. Place loading tool into coder. Coder and tool will mount in one direction only. Press new tumblers firmly into place.

STEP 5:
Remove coder and tool as one unit. Check to insure that all tumblers are in place. Replace lock cap.

STEP 6:
Insert New key. Press cap in and rotate key counter clockwise left to locked position.

Vendo®

STEP 1

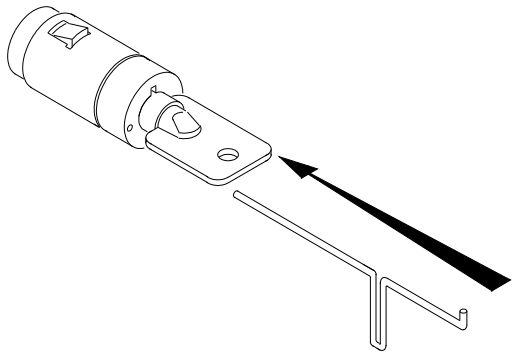

STEP 4

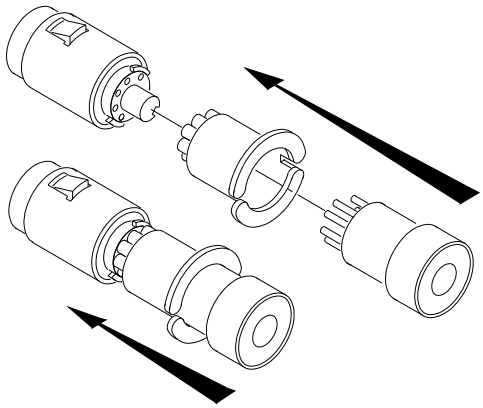

STEP 2

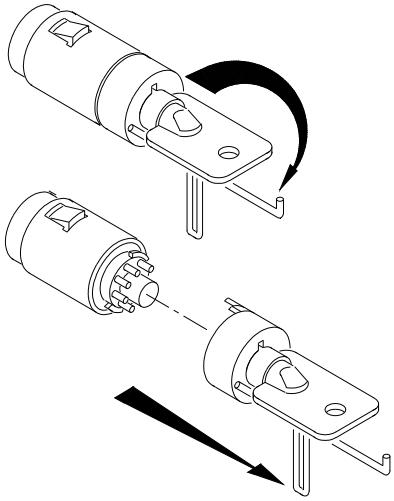

STEP 5

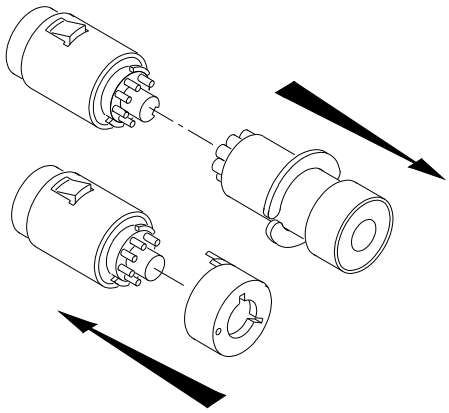

STEP 3

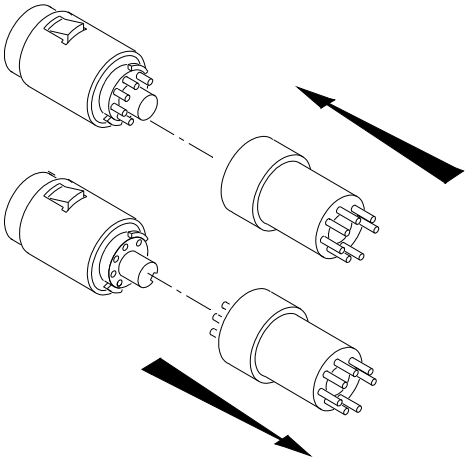

STEP 6

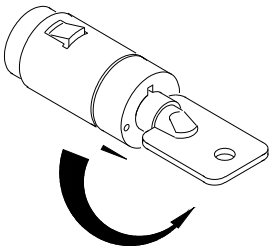

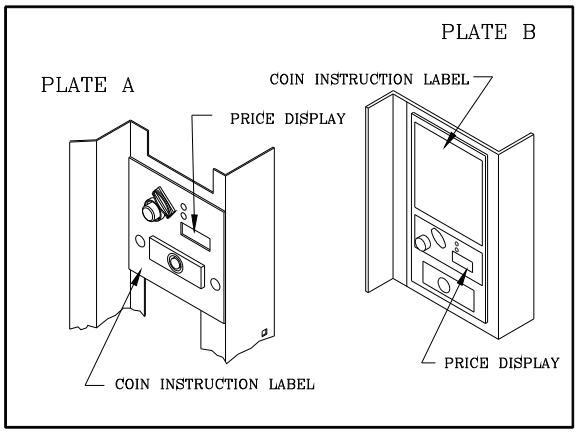

FIGURE 3

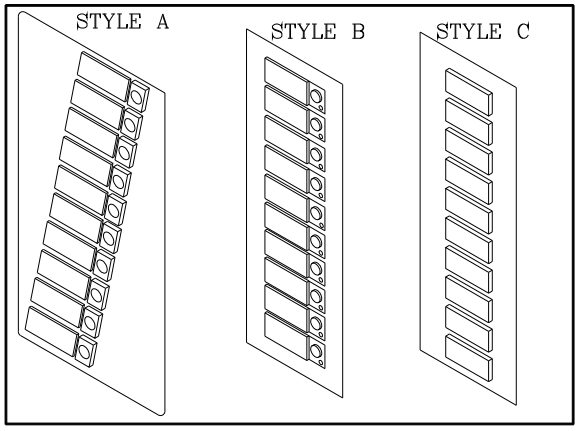

FIGURE 4

LABEL INSTALLATION

COIN INSTRUCTION LABEL & PRICE LABEL APPLICATION:
Apply labels to a clean and dry surface. Peel backing from label and apply to plate with a firm even pressure.

INSTRUCTION LABEL
(Refer to figure 3 for the following information.)
Plate "A" has Validator Opening separate and above the Coin Plate "B" shows the Validator Opening built in the Coin Plate. Apply Instruction Label to area shown (as needed by the vendor).

FLAVOR LABELS INSTALLATION:
In figures 4 & 5, corresponding styles are indicated by A, B, C, D, or E notations.
Insert Flavor Labels to the side or top of Selection Window or Button depending on the style. See Figure 4 for selection style. Rear view of windows and buttons is shown in Figure 5. Arrows point the direction to insert labels.
Selection Window and Selection Button Labels identify product contained in stack columns.

FIGURE 5

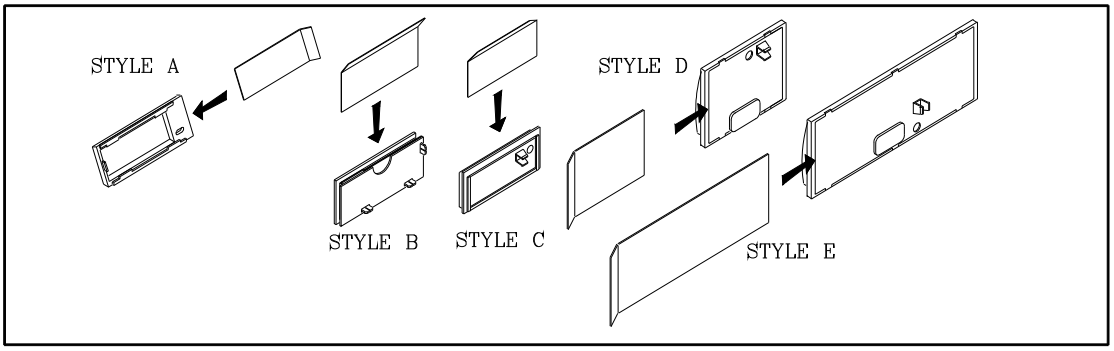

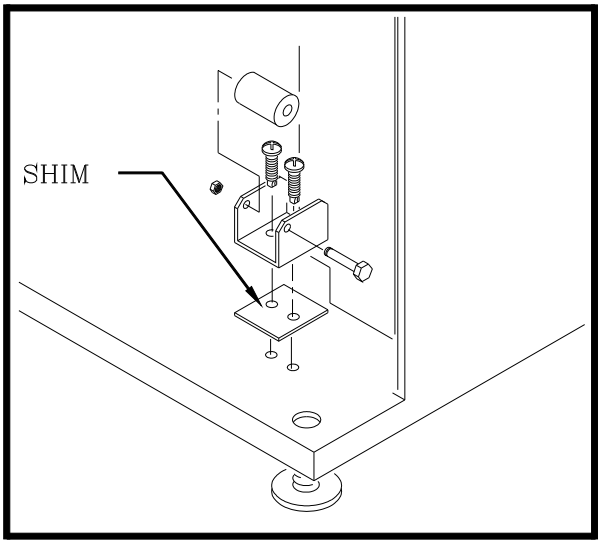

FIGURE 7

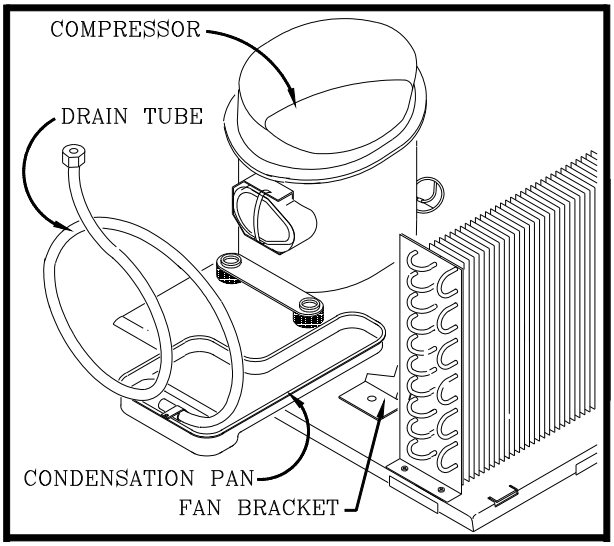

FIGURE 9

ALIGNMENT CHECKS

DOOR ROLLER CHECK:
The Door Roller assembly is raised or lowered by adding or removing shims, (see figure 7). Raising or lowering the roller will help ensure the proper alignment of the door lockstud to the cabinet latch.

DOOR ALIGNMENT CHECK:
After any door adjustment, the Quicker Lock should align itself automatically. If additional adjustment is necessary, loosen mounting screws, (see Figure 8), raise or lower latch to the correct position. Tighten mounting screws the floating nut of the Quicker Lock must be able to engage the bolt of the T-handle.

REFRIGERATION AREA CHECK:
Check the position of the Condensation Pan, see Figure 9. The correct position of the Condensation Pan is between the Compressor and the Condenser Fan Bracket. Be sure the Drain tube is clipped to the pan and free of kinks. A loop must be maintained in the tubing. The loop prevents warm air from reaching the evaporator area.

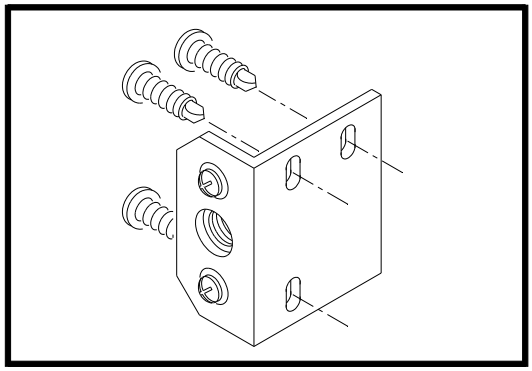

FIGURE 8

TEMPERATURE CONTROL

PRODUCT TEMPERATURE CHECK: (Reference only)
Allow vendor to run 24 hours. Vend product, insert test device (thermometer) into beverage.

TEMPERATURE CONTROL SETTING:
The temperature inside the cabinet is regulated by the Temperature Control, located on the left side of the Evaporator (see Figure 10). Before adjusting control, make sure the refrigeration system is working properly. Check that all fans run freely and do not make excessive noise. Check that the vanes of the Evaporator are free of obstructions. Air flow over the vanes is important for proper operation of the refrigeration unit. Check the door for a tight seal.

When the air temperature at the Capillary tube reaches 39 degrees Fahrenheit, the refrigeration system will cycle on (see Figure 11). To decrease the temperature, turn the Temperature Control Screw clockwise (see Figure 10). To increase the temperature, turn the screw counter-clockwise. The temperature will change approximately 6 degrees with every 1/4 turn of the control screw.

The Capillary tube is positioned in the air flow of the evaporator (see Figure 11). It must not touch the rear of the cabinet wall or the evaporator shield (except at the clip). It is possible to distort the position of the tube upon replacement and installation. If the refrigeration system is replaced, check the Capillary tube's position.

FIGURE 10

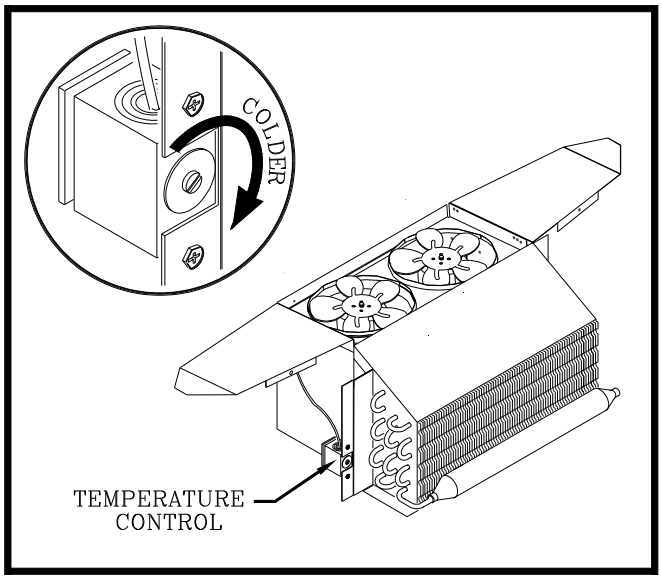

FIGURE 11

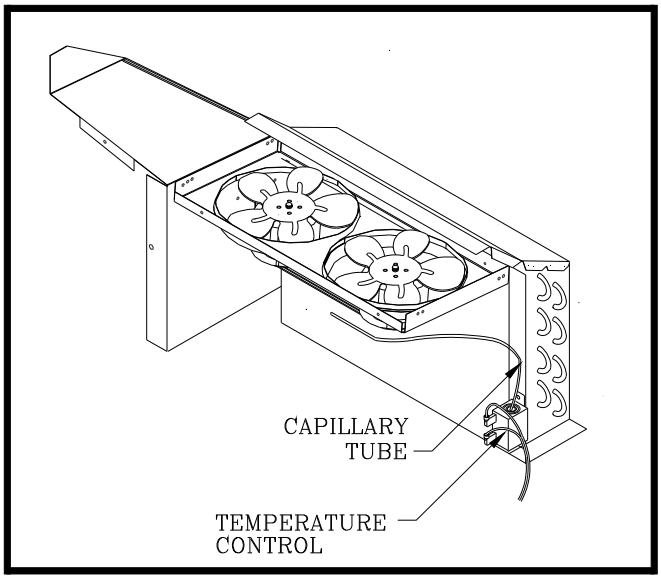

LOADING INSTRUCTIONS

BASIC LOAD SET-UP:
The Univendor-2 machine is capable of vending a variety of product. The Chart on page 7 is a basic guide for the load set-up of these products. Refer to the chart and the items in Figure 12 for each product's setting and kits. Installation Instruction are included with each kit. Call a service representative for kits or further information.

Open upper and lower product cage assemblies at front of stack to load product in columns. Load product evenly. Bottles are loaded with crown end placed toward the back of the column. After filling columns, close product cage assemblies. In initial loading, prime the machine by advancing the product into the buckets. To advance product, insert proper coins and push the selection button of the column you wish to prime. When the bucket is loaded the column is ready to vend. Prime all columns.

FIGURE 12

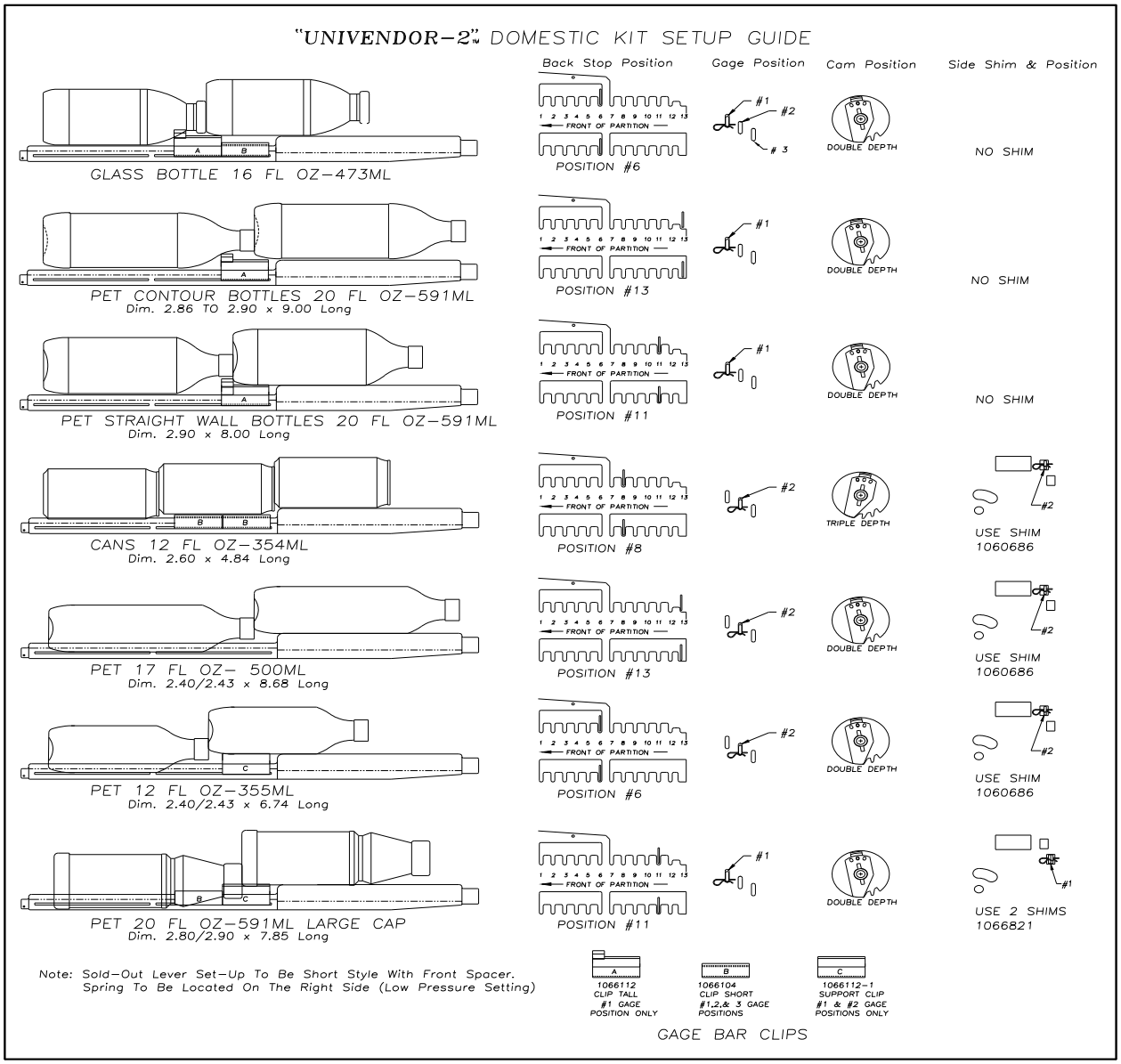

VEND MECHANISM PARTS DESCRIPTION

The parts listed below are part of the Vend Motor Mechanism (refer to Figure 17 on page A6). One Mechanism is required per column. The parts are interchangeable. Setting will differ between single, double or triple depth.

MOTOR: P/N 388637
This motor is a thermal protected, 115 volt, 60 hertz, shaded pole motor. The motor has an externally mounted spring loaded mechanical brake. The Motor is attached to the Mech. Plate by three screws.

MOTOR CAM: P/N 390360
The Motor Cam assembly consists of two parts, the Cam and the Cam Retainer The Cam controls the Motor Carrier and the Start/Bypass Switches. The Cam is Attached to the Motor by the Cam Retainer (Retainer P/N 389401). The Retainer rotates left or right, provides for single, double, or triple depth operation. (see page S-7 for Cam Settings)

MOTOR CARRIER SWITCH: P/N 388687
Two switches are located below the Motor Cam. The outside switch is the motor carrier switch. This switch holds the motor on though the vend cycle. The motor stops when the motor Carrier switch drops out.

SOLDOUT SWITCH: P/N 368299 / BASE SWITCH: P/N 388303
There is one Soldout Switch and one Base Switch above the Vend motor. The Soldout Switch is actuated by the Soldout flap when the column is empty. It stops the motor from running. When all columns are empty the Electronic Control stops the coinage from accepting money.

SELECTION SWITCH: (See part Section of the Manual for P/Ns.)
The selection switch sends power to a Vend Motor when a Customer Presses a Selection Button. The Selection Switches are beneath the Selection Button/Windows.

VEND BUCKET: P/N 1060139
The Vend Bucket holds the product(s) in a ready to vend position at the base of each column.

ADAPTER COUPLING: P/N 1027042
The Adapter coupling couples the motor to the bucket. It is located behind the motor, on the motor shaft.

ANTI-TILT CLIP: P/N 389712
The Anti-Tilt Clip prevents product from dropping out of the Bucket if the Vendor is tilted. The Clip is located in the bucket.

GATE: P/N 1066082
The gate holds product above the Vend Bucket.

GATE LINK: P/N 1008501
The rotation of Vend Bucket moves the gate link, this opens the gate allowing one layer of product to drop into the bucket.

GAUGE BAR: P/N 1064333
The Gage Bar Holds the product (s) inside the bucket. It also regulates which product is vended first when Double or Triple depth setting are used (See page S-7 for setting).

FIGURE 13

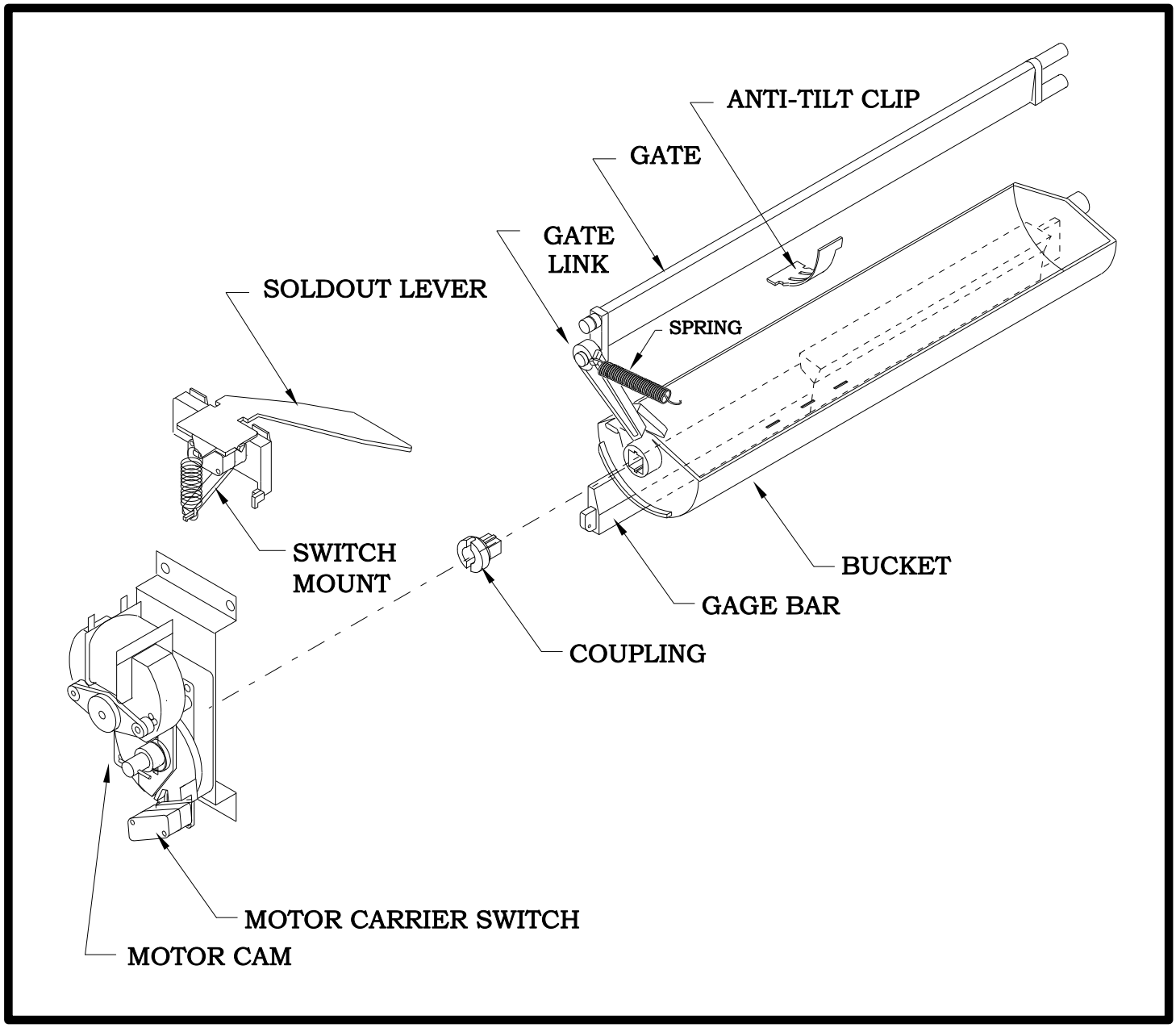

VEND CYCLE

Several operations take place during the Vend Cycle: a purchase is made, the cam and bucket rotate, product is dispensed and reloaded. The sequence of these operations change slightly when the column's depth setting is changed. With the Single Depth Setting, one purchase is made and the bucket is reloaded, the Cam Sequence occurs once per bucket revolution. With the Double Depth setting, two purchases are made before the Bucket is reloaded, the Cam Sequence occurs twice per bucket revolution. With Triple depth setting, three purchases are made.

PURCHASE SEQUENCE:

PS 1. Customer insert money.
PS 2. The Coinage Unit sends a signal energizing the Credit Relay. This creates a path of power for the Selection Switch.
PS 3. Customer presses a Selection Button.
PS 4. The chosen Selection Switch closes, creating a path of power to energize a Vend Motor.
PS 5. The Vend Motor turns the Bucket and Cam.
PS 6. Product is Immediately dispensed.

CAM SEQUENCE: (See Figure 14, Double depth Setting Pictured)

CS 1. As the Motor turns the Cam, the Switch falls into the low part of the cam. This interrupts the power path to the Credit relay canceling credit.
CS 2. Simultaneously, the Motor Carrier Switch is lifted to the high part of the cam. This provides an alternate path of power, to the Vend Motor.
CS 3. With the Cam still rotating, the Switch lifts back to the part of the Cam, (permitting another purchase when it is required).
CS 4. The Motor Carrier Switch falls into the lower part of the Cam, cutting power to the Motor. The Motor stops.

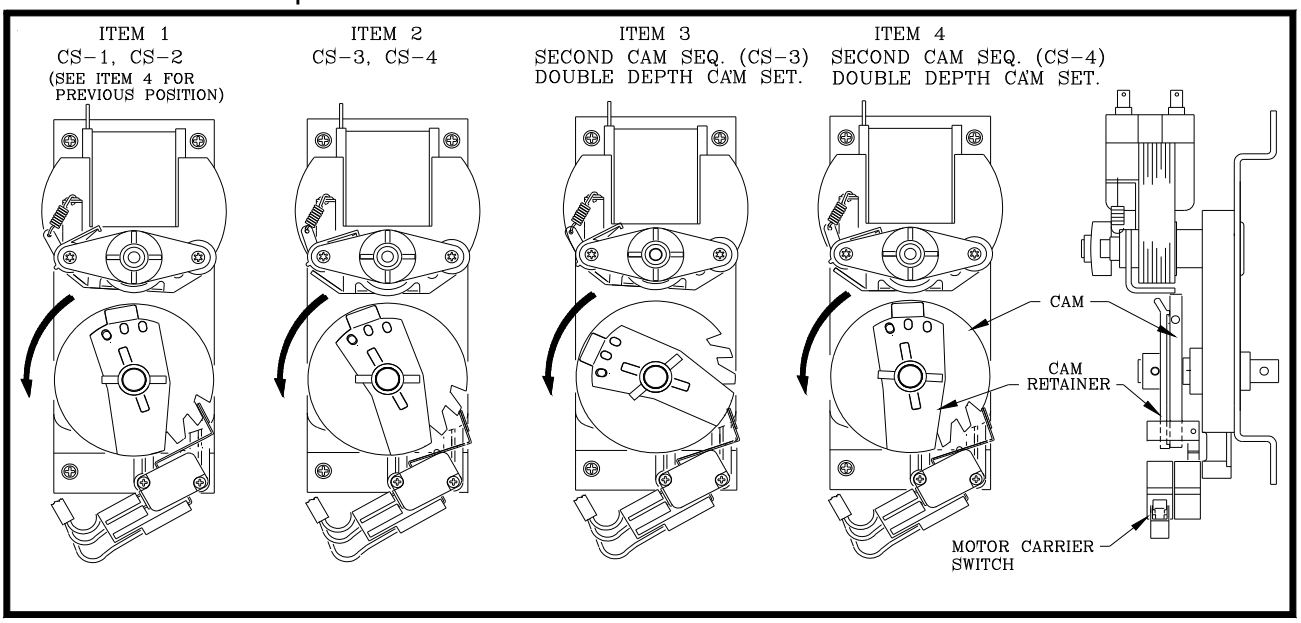

FIGURE 14

RELOADING SEQUENCE: (See Figure 15)

RS 1. The gate link rests at a locked position, in a cutout on the mech. plate. This locked position prevents the gate from opening out of sequence.

RS 2. The gate link is guided by a slot in the mech. plate and actuates by a ridge on the bucket. As the bucket turns, the link is moved out of the locked position.

RS 3. As the link rises, the gate is opened. The spring maintains Pressure on the Link and the gate.

RS 4. Product falls onto outside of the bucket.

RS 5. The bucket releases the gate link causing the gate to rest against the product.

RS 6. As the product falls into the bucket, the link returns to the locked position and the gate is closed.

RS 7. The product remaining in the column is caught by the closed gate, keeping it above the bucket.

RS 8. Bucket stops, product is Ready to vend.

FIGURE 15

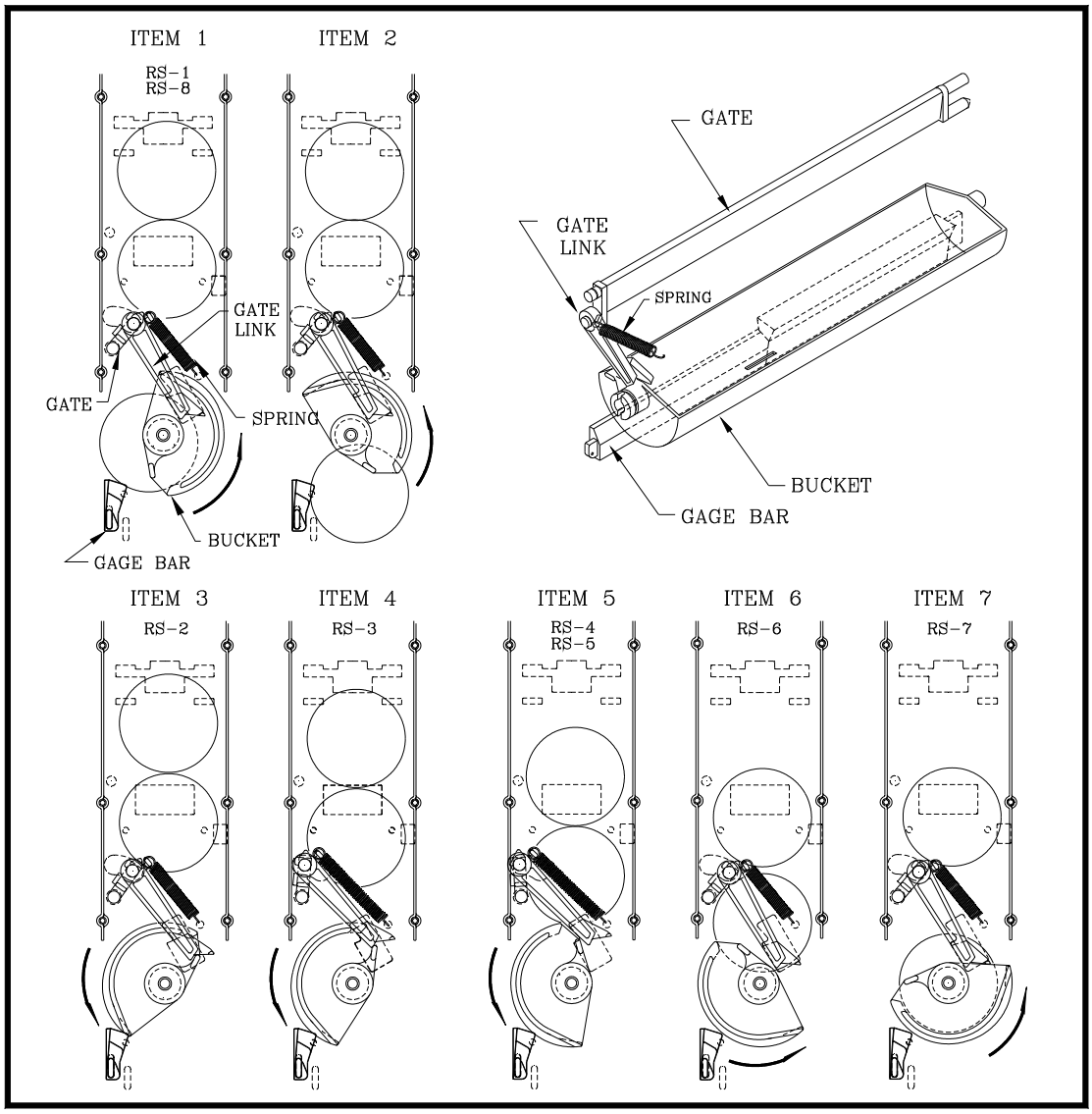

LIGHTING WIRING DIAGRAMS

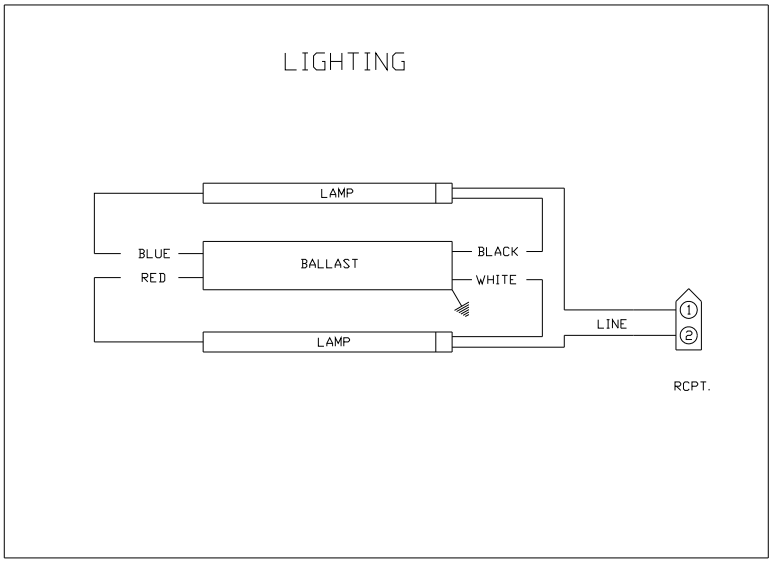

REFRIGERATION WIRING DIAGRAM

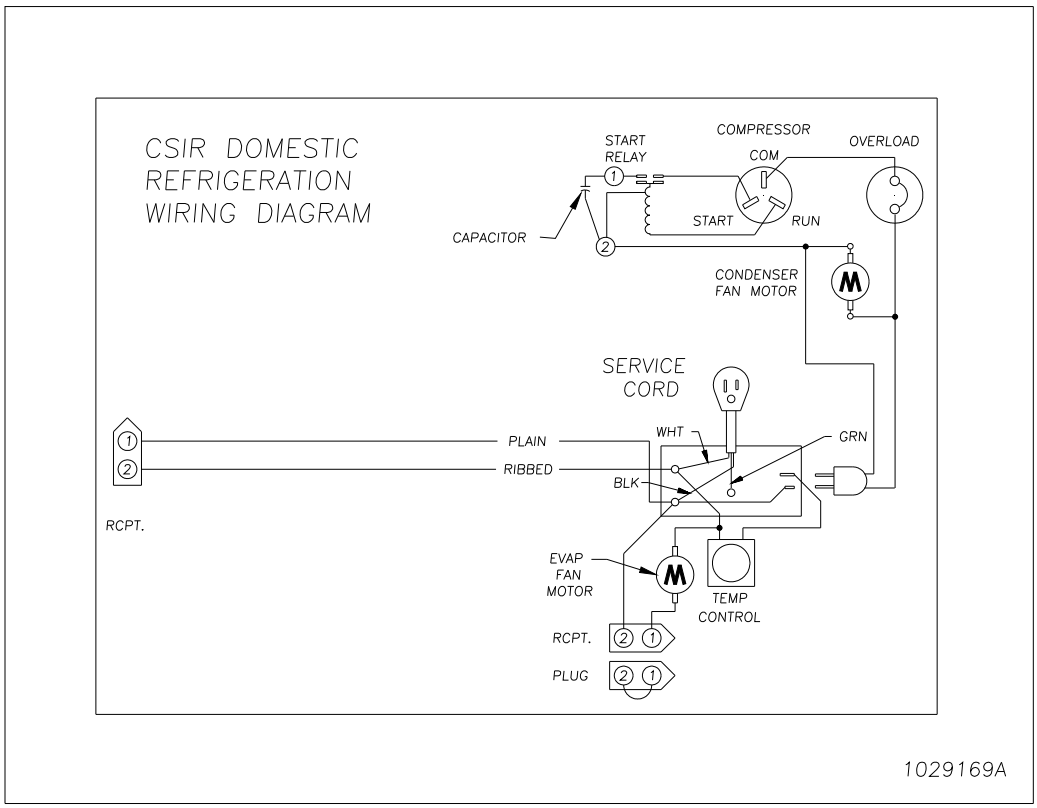

REFRIGERATION OPERATION

The refrigeration operation section is divided into three areas: Basic Refrigeration Principle. Detailed Vending machine Refrigeration cycle, and Parts Description.

BASIC REFRIGERATION PRINCIPLE

What a refrigeration system really accomplishes is the transfer of heat. A refrigeration system removes the excess heat from a refrigerated area and then transfers it to a condenser where it is dissipated. As heat is removed, the refrigerated area cools.

In vending machines, large quantities of the heat must be transferred rapidly, economically and efficiently. This process must be able to withstand continuous repetition, without loss of refrigerant, over an extended period. The most common system used in the vending industry is the vapor compression (or simple compression) cycle system. It consists of four basic elements: an evaporator, a compressor, a condenser, and a pressure reducing restricted (all part of a sealed system).

The compression system operates at two pressure levels: the low evaporating pressure and the high condensing pressure. The refrigerant acts as the transport medium, in which heat is moved from the evaporator to the condenser; at the condenser, the heat is dissipated into the surrounding air.
The liquid refrigerant changes from a liquid, to a vapor and back to a liquid again. This change of state allows the refrigerant to absorb, and rapidly discharge, large quantities of heat efficiently.

BASIC VAPOR COMPRESSION SYSTEM CYCLE DESCRIBED:
In the evaporator the liquid refrigerant vaporizes. This change occurs at a temperature enough to absorb heat from the refrigerated space. The temperature of vaporization is controlled by the pressure maintained in the evaporator (the higher the pressure, the higher the vaporization point).

The compressor pumps the vapor from the evaporator, through the suction line, and to the condenser. The compressor takes the low pressure vapor and compresses it, increasing both the pressure and the temperature. The compressor pumps the vapor at a rate rapid enough to maintain the ideal pressure. The hot high pressure vapor is forced out of the compressor, into the discharge line and then into the condenser.

Air is blown through the condenser, allowing heat to transfer from the condenser and into the passing air. As the heat is removed, the stored refrigerant is condensed into a liquid. The liquid refrigerant is stored in the lower tube of the condenser. It is there, available to flow through the restricter tube, back into the evaporator, where the refrigeration cycle is repeated.

Vendo®

DETAILED REFRIGERATION CYCLE

The following is a detailed refrigeration cycle as it applies to the refrigeration system installed in Vendo equipment. (Refer to the flow chart in Figure 16)

As the temperature in the cabinet rises, the liquid in the thermostat feeler bulb also rises in temperature. As this liquid becomes warmer, it expands. This expanding liquid expands against the temperature control bellow which operates the temperature control switch. The temperature control switch turns on both the compressor and condenser fan.

The evaporator fan pulls air from the front of the refrigerated space of the cabinet. It pulls the air through the evaporator, and blows it up the back of the vend stack. (The evaporator fan runs continuously.) As the air passes through the evaporator, heat is draw from the air and transferred to the liquid refrigerant. As the cooled air circulates through the vend stack, heat is drawn from the product and transferred to the circulating air. The heated air is again drawn through the evaporator where the heat is removed.

In the evaporator, the liquid refrigerant draws heat from the circulating air. As refrigerant receives heat, it vaporizes.

The compressor pumps the vapor from the evaporator and compresses it (increasing both pressure and temperature). The compressor forces the compressed vapor out, through the discharge line and into the condenser.

The condenser fan pulls air through the condenser. As the hot refrigerant vapor passes through the condenser tubes, heat is drawn from the vapor. This heat is dissipated into the passing air, the air then exits out the back of the vendor. As the refrigerant vapor in the condenser lines is cooled, it returns to a liquid state.

From the condenser the liquid flows to the drier. The drier removes any water and solid particles from the liquid refrigerant.

The cooled liquid refrigerant continues from the drier, through the capillary tube, to the evaporator. The capillary tube steadies the flow rate of the refrigerant. Its small inside diameter allows the pressure in the evaporator to remain low while the pressure in the condenser is high.

The cool refrigerant in the evaporator draws heat from the circulating air in the cabinet. As the temperature in the cabinet drops, the liquid in the thermostat feeler bulb cools and condenses. The condensed liquid releases the pressure against the thermostat control bellows, de-actuating the temperature control switch. The deactuated control switch turns off the compressor and condenser fan.

When the temperature in the cabinet rises above the thermostat's setting, the compressor and the condenser fan engage again. The refrigeration process is continuous as long as the compressor operates.

FIGURE 16

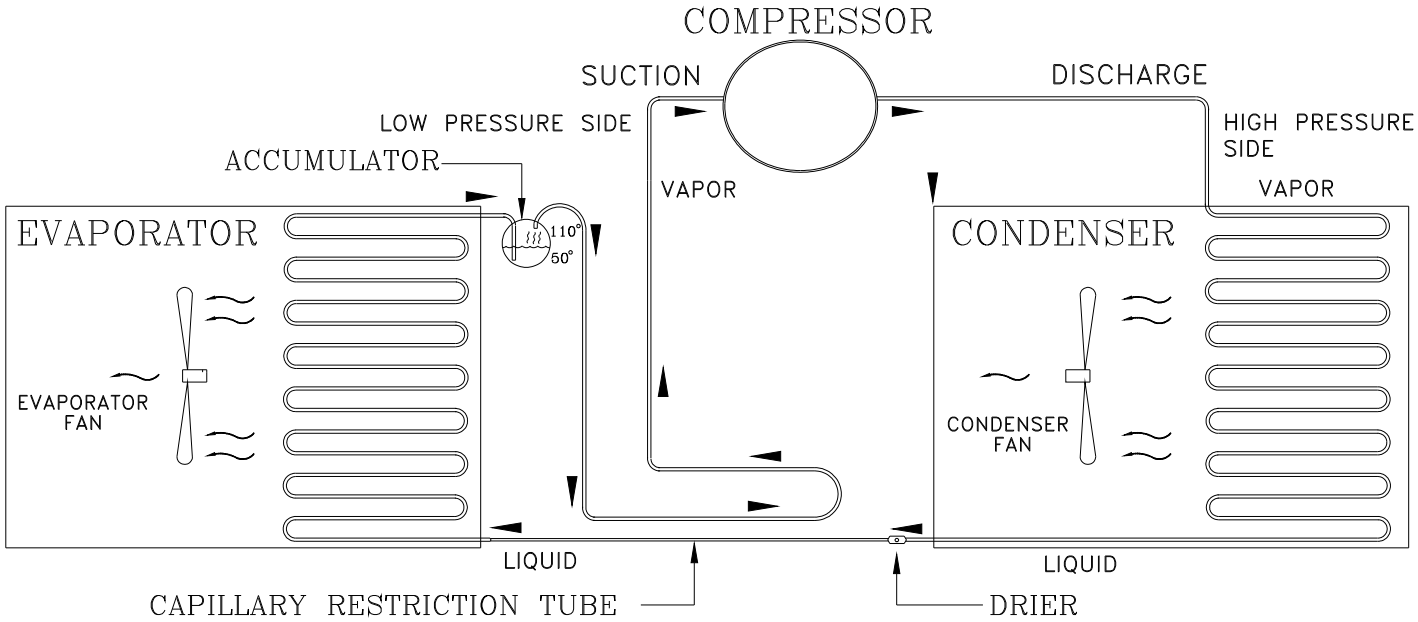

REFRIGERATION PARTS DESCRIPTION

The Compressor, Condenser, Drier, Capillary Tube, Evaporator, and Accumulator are part of a sealed system (refer to figure 16). These items are not available separately. For the part number of the sealed refrigeration system refer to the common parts section of the manual.

COMPRESSOR

The compressor takes in low pressure vapor and compresses it, increasing both the pressure and the temperature. The hot high pressure gas is forced out to the condenser. The compressor and the motor that drives the compressor are sealed inside a housing. The compressor, as a unit, is mounted on the refrigeration base. The base is mounted in the bottom of the vendor, outside the sealed refrigeration space.

CONDENSER

The condenser takes heat out of the high pressure vapor that it receive from the compressor. As the vapor passes through the condenser it cools and returns to a liquid state. The condenser is mounted to the refrigeration base near the front of the vendor. It is easily accessible for cleaning.

DRIER

The Drier is a molecular sieve strainer drier. It removes water and solid particles from refrigerant liquid. One side of the dryer is connected to the outlet line of the condenser; the other side is connected to the capillary tube going to the evaporator.

REFRIGERATION PARTS DESCRIPTION (CONTINUED)

CAPILLARY TUBE

The capillary tube controls, at a steady rate, the flow of refrigerant liquid to the evaporator. It has a very small inside diameter to keep pressure in the evaporator low while the pressure in the condenser is high. It is the connecting link between the condenser and evaporator.

EVAPORATOR

The Evaporator is a heat transference device. It removes the heat from the air in a refrigerated space and transfers it to the refrigerant liquid. This liquid evaporates into a vapor and is sucked out by the compressor. The evaporator is mounted inside the refrigerated space of the cabinet, directly below the delivery chute.

ACCUMULATOR

The accumulator traps any refrigerant liquid which did not boil off into a vapor before reaching the compressor. The accumulator allows the refrigerant liquid to boil off as a vapor (preventing damage to compressor). It also prevents suction line sweating. The accumulator is mounted in the suction line on the outline side of the evaporator.

FIGURE 17

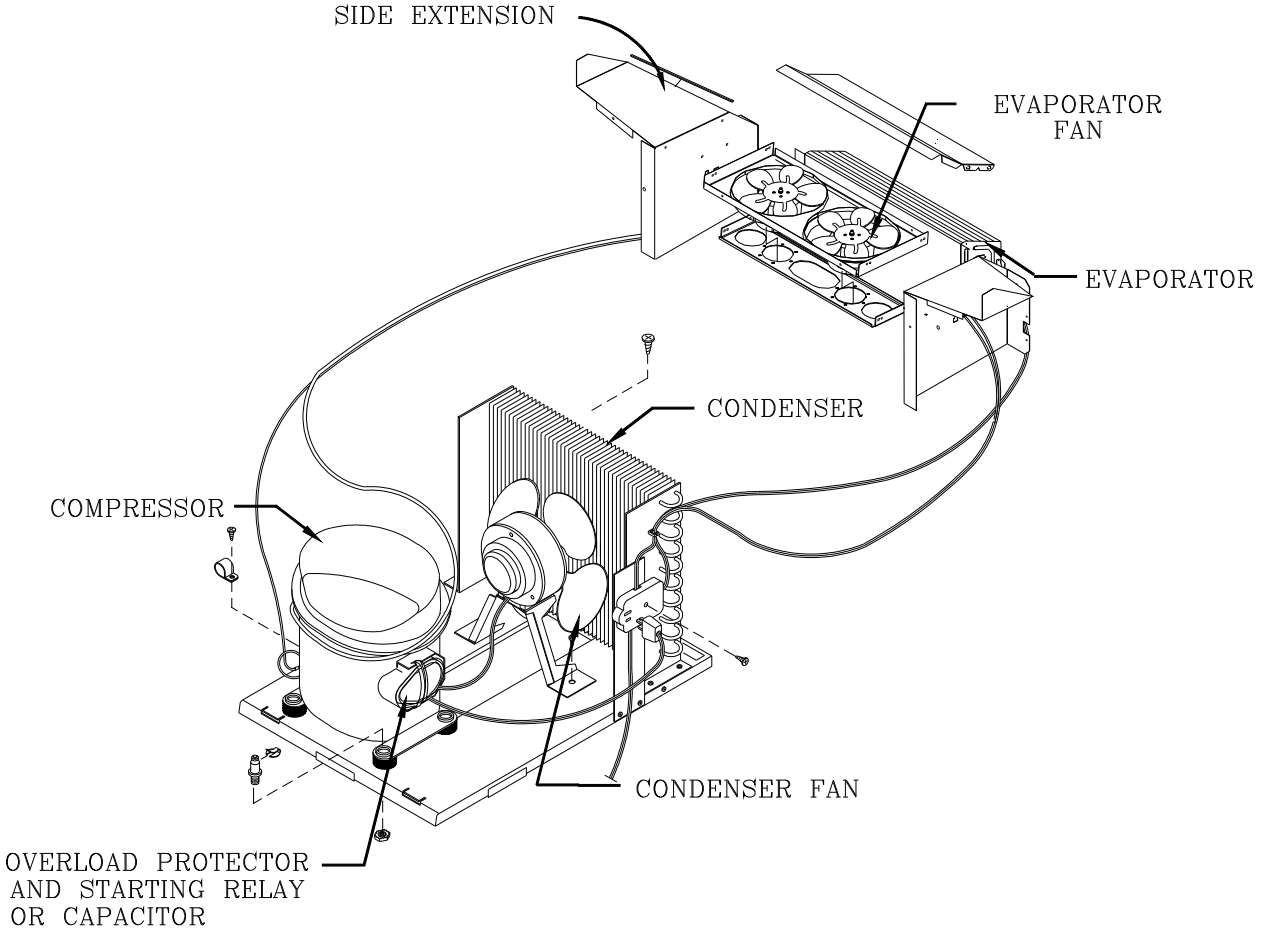

(The parts listed below are not part of the sealed refrigeration system and are available separately. For part numbers, see the refrigeration assembly in the common parts section of the manual.)

CONDENSER FAN ASSEMBLY

The condenser fan pulls cool air from outside the vendor, through the condenser, over the compressor and blows it out the back of the vendor. This cool air removes excess heat from refrigerant in the condenser. The condenser fan runs when the compressor is engaged. The fan assembly is mounted on the refrigeration base between the condenser and compressor.

EVAPORATOR FAN ASSEMBLY

The Evaporator fan pulls air from the front of the refrigerated space, through the evaporator, up the rear of the refrigerated space into the vend stack. The fan blows air through the evaporator (which removes the heat from the air). It circulates the cool air over the product, removing excess heat from the product. The evaporator fan assembly is mounted to a fan bracket, mounted to the extensions of the evaporator. These parts are located in the refrigerated area of the cabinet.

TEMPERATURE CONTROL

The temperature control regulates the temperature inside the refrigerated space of the vendor. The control is adjustable. The temperature control consist of two main parts: the temperature control box and the thermostat feeler bulb. The control box is mounted to the side of the evaporator. The bulb is mounted on the evaporator fan bracket, in the air flow of fan. The bulb is a very narrow tube with a refrigerant liquid inside. Small tubing connects the bulb to the control box. As liquid in the feeler bulb warms, it expands into the tubing and then into the control box, pressing against a bellows. The bellows closes a switch in temperature control, activating the compressor and the condenser fan. As the liquid in the feeler bulb cools it contracts and releases the pressure against the bellows, opening the switch, deactivating the compressor and the condenser fan.

START CAPACITOR - (WHEN USED)

The start capacitor is used on start up of the refrigeration system to phase out excess power to and from the refrigeration system.

STARTING RELAY

The starting relay is mounted in the terminal box on the side of the compressor housing. When the compressor first starts up, the starting relay closes and completes a starting circuit. When the compressor motor reaches operating speed, the starting relay opens and breaks the starting circuit.

THERMAL OVERLOAD SWITCH

The thermal overload switch is mounted in the terminal box on the side of the compressor housing. If the compressor motor gets hot or draws too much current, the thermal overload opens and breaks the starting and running circuit of the motor. As the motor cools, the thermal overload closes, allowing the compressor to run.

MAINTENANCE

The following section is a basic guide for general maintenance and servicing of the Vendor . This section is divided into four parts: (I) Preventative Maintenance, (II) Lubrication Guide, (III) Care and Cleaning, (IV) Basic Trouble Shooting.

I. PREVENTATIVE MAINTENANCE SUGGESTIONS:

When ever a Vendor is visited on its site, the following service should be performed. Preventative maintenance will help prevent future problems with the Vendor.

A. Observe the Vendor and its surrounding area for any unusual indications of problems (rear on cabinet, obstructions of the air flow, dark spots on the sign face, etc.)
B. Open the door and visually check the inside of the Vendor (water accumulation, rust marks, moisture around the edges of the inner door, etc.)
C. Check the fluorescent lamps, replace as necessary. Replace single pin (slimline) lamps within 24 to 48 hours of burnout. This will prevent damage to ballast.
D. Check the product temperature for proper cooling.
E. Check evaporator drain for obstruction; water in the evaporator area must drain to the condensate pan.
F. Empty condensate pan.
G. Clean the condenser, free vanes of dirt, lint, etc.
H. Check evaporator fan(s) run normally.
I. Check the Compressor and condensate fan run normally.
J. Investigate any unusual sounds (fan blades hitting something, refrigeration lines rattling, etc.)
K. Clean coin acceptor.
L. Deposit all coinage accepted by the Vendor to check for proper operation of the coinage mechanism.
M. Test the Vendor and make a report on the problems,

II. LUBRICATION GUIDE:

Lubricate indicated areas as directed on the chart below.

INTERVALS	PARTS	LUBRICANT
Every six months	Top hinge of door door hinge pin at the base of cabinet door latch cam to cabinet strike T-handle shaft & latch.	Grade two, high low temperature grease
As necessary	Pivot area of bucket and gate	Grade two, high low temperature grease

III. CARE AND CLEANING

A. GENERAL PROCEDURE (painted metal areas)

Wash Vendor with soap and water. The exterior may be waxed with any good automobile wax.

B. FRESH PAINT SPLASHES, GREASE, GLAZING COMPOUND REMOVAL

Before drying, these elements may be removed by rubbing lightly with grade “A” Naptha (or equivalent grade solvent). After removal, use general cleaning procedure (listed above as A)

C. LABELS AND STICKER REMOVAL

Use Kerosene, VM&P grade Naptha or petroleum spirits for removal. When the label material does not allow penetration of solvent (such as vinyl) the application of heat (hair blow dryer) will soften the adhesive and promote removal. **CAUTION:** Excessive heat can cause surface damage. After the label is removed, use the general cleaning procedure (listed above as A).

D. SCRATCH REMOVAL

Remove or minimize hairline scratches and minor abrasions by using any good quality automobile polish. Test product before using.

E. LEXAN SIGNS

To clean Lexan sign faces the following procedure is recommended.

1. Wash sign with mild soap or detergent and lukewarm water.
2. Using soft cloth or sponge, gently wash the sign. **DO NOT SCRUB!**
3. Rinse well with clean lukewarm water.
4. Dry thoroughly with a chamois or cellulose sponge (to prevent water spotting). **DO NOT USE SQUEEGEE!**

NOTE: Most organic solvents, petroleum, spirits, or alcohol are **NOT** compatible cleaning materials for lexan signs. Usage of those materials could permanently damage the sign.

F. REFRIGERATION AREA

The condenser and evaporator must be kept clean for efficient operation. Be sure all vanes and tubing are clean and clear of obstruction; This allows free passage of air. Clean with a brush, a vacuum cleaner or compressed air. Keep cabinet drain open; clean as necessary.

Vendo®

TROUBLE-SHOOTING GUIDE

This guide is a general list of probable problems, causes, and solutions. For problems not listed or additional question, contact the Field Service Department at Vendo, 7209 N. Ingram Ave., Fresno, CA 93650 or call 1-800-344-7216. Please have the maufacturer's date code and model number of the vendor when you call.

The trouble-shooting guide is divided into three columns: First Column, Possible Problem; Second Column, Possible Cause; Third Column, Service Suggestion.

POSSIBLE PROBLEMS	POSSIBLE CAUSE	SERVICE SUGGESTION
Returns all good coins	No power to vendor	Check power Supply
	No power to changer	Check coin mechanism plugs check for faulty harness wiring (see wiring diagram for circuit)
	Acceptor is out of adjustment or coin gate is not closed	Check coin mechanism
	Electronic-CREM function: 1.) No power to acceptor. 2.) Defective acceptor	1. Check electrical connections of the acceptor. 2. Replace acceptor
	Coin paths are dirty	Clean acceptor with approved cleaner. **DRY VERY THROUGHLY**

POSSIBLE PROBLEM	POSSIBLE CAUSE	SERVICE SUGGESTION
Money accepted no product vended	No selections work	Check No.1 selection switch, replace if necessary.
	No. 1 selection works, No. 2 thru last does not.	Check No 2. section switch, replace it necessary. This pattern can continues thru last selection switch as selection circuit goes from 1 to 2 to 3. etc., to last
	Soldout Switch (of column selected) inoperative	Check switch, replace
	Motor starts, does not run	Check motor carrier switch, replace switch
Vend motor runs until two or three products are vended or vend motors run continuously.	Improper cam lobe adjustment	Check Cam for proper arrangement of cam lobes (see product set up guide)
	Motor carrier switch not making contact with cam lobe or switch	Check lever for proper lever positioning and freedom of movement
Refrigeration unit will not run at all	No power to vendor	Check power supply also check service cord connections.
	Thermostat open (temperature control)	Check thermostat (Apply insulated jumper across terminals, if compressor starts, replace thermostat)
	Temperature control bulb out of position	Check that bulb is in air flow
Compressor will not start	Overload Protector Inoperative	Check overload (apply insulated jumper across terminal, if compressor starts, replace overload)
Compressor will not start condenser fan motor running, unit cool (no power to compressor)		

POSSIBLE PROBLEM	POSSIBLE CAUSE	SERVICE SUGGESTION
Compressor will not start,	Starting relay or capacitor	Check relay or capacitor

condenser fan motor running - unit hot (power to compressor)	inoperative	replace
	Compressor inoperative	Disconnect power to vendor, remove all leads from compressor, check continuity from “common”, “start” and “run” to compressor case. If continuity shows, replace compressor. Also Check from “common to start”. (using continuity or IHMS.) If meter fails to show reading replace compressor.
Compressor starts but does not run	Will not cycle	Check overload and contact, replace overload if necessary
	Starting relay stays closed	Replace relay
	Thermostat inoperative	Check thermostat clean contacts with approved electrical cleaner. Replace thermostat it necessary
	Compressor motor problem	Check, replace
Compressor runs but cabinet temperature warm	Loss of refrigerant	Replace refrigeration unit (Note: any work of this nature done without express permission from The Vendo Company can void refrigeration unit warranty)
	Condenser fan not working	Check circuit to run motor. Replace motor. Check for obstruction of fan blade.
	Blocked or dirty condenser (refer to initial installation in the service manual)	Check condenser vanes for obstruction, lint or dirt. Clean, also check for proper air flow through refrigeration area.
	Evaporator fan not working	Check circuit to fan motor. Replace motor also check for obstruction of fan blade
	Bad inner door seal	Check for moisture on seal. Adjust inner door as necessary (see initial setup of service manual). Replace door seal.

POSSIBLE PROBLEM	POSSIBLE CAUSE	SERVICE SUGGESTION
Compressor runs, but cabinet temperature warm	Thermostat set too high	Adjust thermostat (see initial set up of service manual)
Compressor runs continuously	Thermostat inoperative	Check thermostat
Evaporator frosted over	Water at base of evaporator unit	Check for proper drainage (such as plugged drain, kinks in drain tube, etc.) check door seal
Product freezing up too cold	Thermostat set too low	Adjust thermostat (See intial set up of service manual)
	Thermostat inoperative (compressor runs continuously)	Check thermostat replace if necessary
	Thermostat feeler bulb out of position	Adjust feeler bulb (see initial set up of service manual)
Excessive noise	Fan blade bent or hitting shroud	Straighten, relocate shroud position, or remove shroud.
	Fan motor noisy	Replace if necessary
	Refrigeration base loose or bent	Tighten bolt or replace if necessary