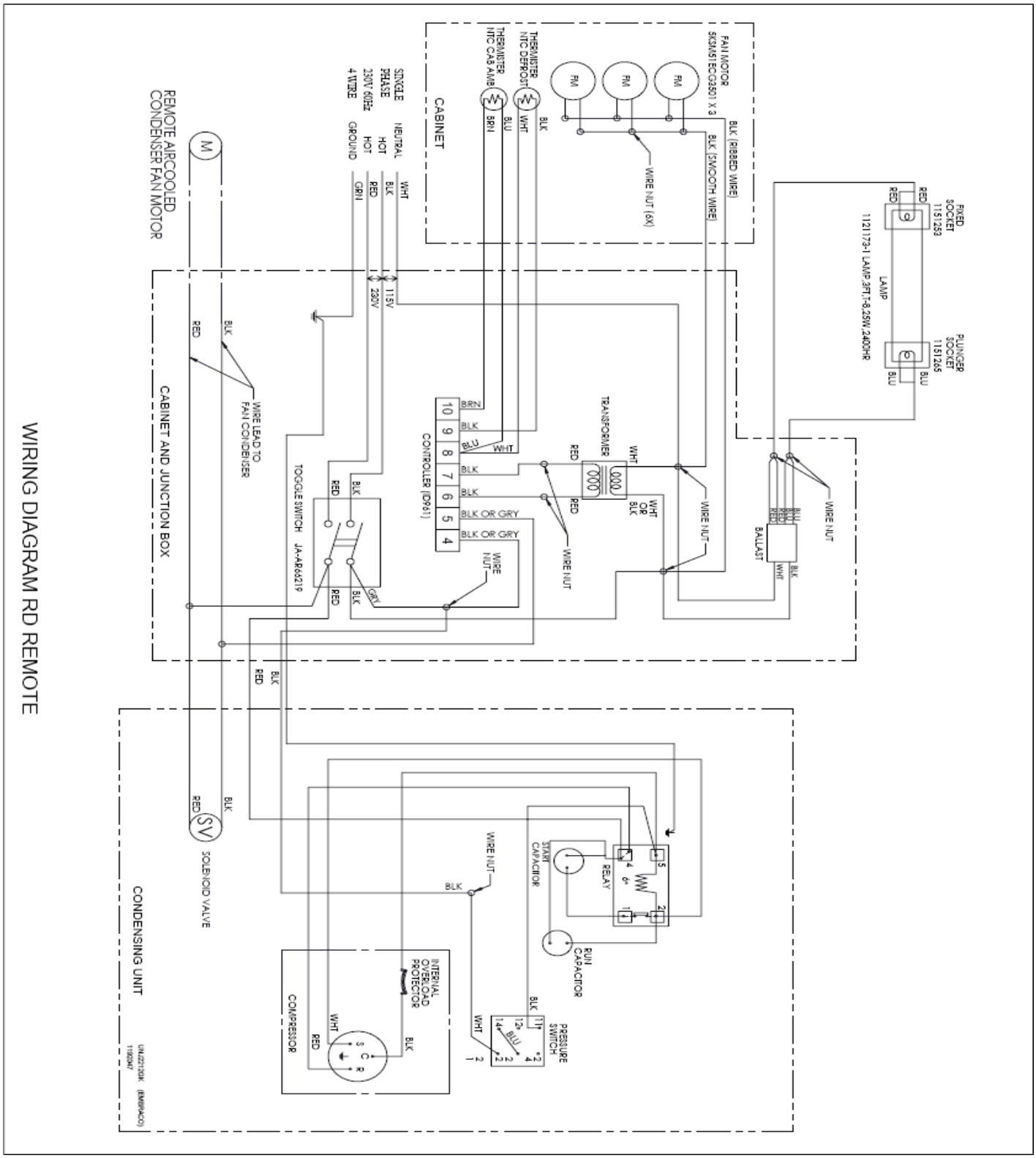Wiring Diagram RD Remote